Installation Manual
Installation & Appliance Set-Up

INSTALLER: Leave this manual with party responsible for use and operation.
OWNER: Retain this manual for future reference.

NOTICE: DO NOT DISCARD THIS MANUAL

QUADRA-FIRE

CASTILE PELLET INSERT APPLIANCE

Model(s):

CASTILEI-MBK ***CASTILEI-PMH***
CASTILEI-CSB

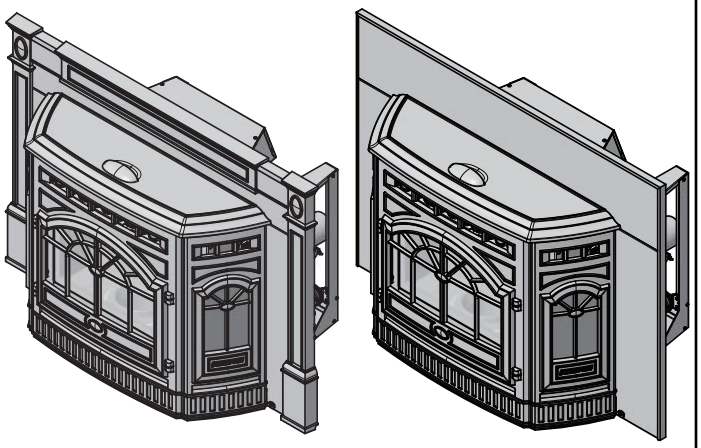

Pellet Fuels Institute

Tested and Listed by O-T-L Portland Oregon USA C US OMNI-Test Laboratories, Inc.

CAUTION

Tested and approved for wood pellets and corn pellets. Burning of any other type of fuel voids your warranty.

CAUTION

Check building codes prior to installation.

- Installation MUST comply with local, regional, state and national codes and regulations.
- Consult local building, fire officials or authorities having jurisdiction about restrictions, installation inspection, and permits.

Installation and service of this appliance should be performed by qualified personnel. Hearth & Home Technologies recommends HHT Factory Trained or NFI certified professionals.

hearthED FACTORY TRAINING Fuel Your Fire

NFI NATIONAL FIREPLACE INSTITUTE® A CERTIFICATION AGENCY

WARNING

If the information in these instructions is not followed exactly, a fire could result causing property damage, personal injury, or death.

- Do not store or use gasoline or other flammable vapors and liquids in the vicinity of this or any other appliance.
- Do not over fire - If appliance or chimney connector glows, you are over firing. Over firing will void your warranty.
- Comply with all minimum clearances to combustibles as specified. Failure to comply may cause house fire.

WARNING

HOT SURFACES!
Glass and other surfaces are hot during operation AND cool down.

Hot glass will cause burns.

- Do not touch glass until it is cooled
- NEVER allow children to touch glass
- Keep children away
- CAREFULLY SUPERVISE children in same room as fireplace.
- Alert children and adults to hazards of high temperatures
- **High temperatures may ignite clothing or other flammable materials.**
- Keep clothing, furniture, draperies and other flammable materials away.

NOTE

To obtain a French translation of this manual, please contact your dealer or visit www.quadrafire.com

Pour obtenir une traduction française de ce manuel, s'il vous plaît contacter votre revendeur ou visitez www.quadrafire.com

Safety Alert Key:

- ***DANGER!*** Indicates a hazardous situation which, if not avoided will result in death or serious injury.
- ***WARNING!*** Indicates a hazardous situation which, if not avoided could result in death or serious injury.
- ***CAUTION!*** Indicates a hazardous situation which, if not avoided, could result in minor or moderate injury.
- ***NOTICE:*** Indicates practices which may cause damage to the appliance or to property.

TABLE OF CONTENTS

1 Important Safety Information.....3
A. Appliance Certification 3
B. BTU & Efficiency Specifications.....3
C. Glass Specifications 3
D. Electrical Rating.....3
E. Mobile Home Approved 3

2 Getting Started.....4
A. Design, Installation & Location Considerations 4
B. Thermostat Wall Control Location.....5
C. Tools And Supplies Needed.....5
D. Inspect Appliance and Components 5
E. Install Checklist.....6

3 Dimensions and Clearances.....7
A. Appliance Dimensions 7
B. Clearance To Combustibles, UL and ULC 9
C. Masonry and Zero Clearance Fireplaces 10
D. Minimum Opening for Masonry and Zero Clearance Fireplaces.....10
E. Installation into a Factory-Built Fireplace.....11
F. Installation into a Masonry Fireplace.....12
G. Prefabricated Metal Chimney.....12

4 Vent Information.....13
A. Venting Termination Minimum Requirements 13
B. Avoiding Smoke and Odors 14
C. Negative Pressure.....15
D. Draft 15
E. Chimney and Exhaust Connection 15
F. Equivalent Feet of Pipe 16
G. Pipe Selection Chart 16
H. Pellet Venting Charts.....17

5 Venting Systems 18
A. Full Reline With Outside Air - Horizontal.....18
B. Full Reline With Outside Air - Vertical.....19

6 Appliance Set-Up 20
A. Leveling System 20
B. Outside Air Kit Instructions 20
C. Door Handle Removal 21
D. Door Removal.....21
E. Adjustable Hearth Support.....21
F. Hearth Support for Standard Surround Only.....22
G. Surround & Trim Set 23
H. Surround and Cast Trim Set 24
I. Optional Log Set Placement Instructions.....25
J. Thermostat Installation and Operation 26

7 Mobile Home Installation.....27

8 Reference Materials 28

9 Accessory List 29

1 Important Safety Information

A. Appliance Certification

Model	Castile Pellet Insert-B
Laboratory	OMNI Test Laboratories, Inc.
Report No.	061-S-77d-6.2
Type	Solid Fuel Room Appliance/Pellet Fuel Burning Type Insert
Standard	ASTM E1509-2004, ULC S628-93 and ULC/ORD-C1482-M1990 Room Appliance Pellet Fuel Burning Type and (UM) 84-HUD, Mobile Home Approved
FCC	Complies with Part 15 of FCC Rules. Operation is subject to the following two conditions: (1) this device may not cause harmful interference, and (2) this device must accept any interference received, including interference that may cause undesired operation.

NOTE: This installation must conform with local codes. In the absence of local codes you must comply with the **ASTM E1509-2004, ULC S628-93, ULC/ORD-C-1482-M1990, (UM) 84-HUD**

The Quadra-Fire Castile Pellet Insert meets the U.S. Environmental Protection Agency's emission limits for pellet appliances sold after May 15, 2015.

This pellet insert needs periodic inspection and repair for proper operation. It is against federal regulations to operate this pellet insert in a manner inconsistent with operating instructions in this manual.

B. BTU & Efficiency Specifications

EPA Certification #:	940-14
EPA Certified Emissions:	1.8 grams per hour
*LHV Tested Efficiency:	N/A
**HHV Tested Efficiency:	N/A
***EPA BTU Output:	8,500 to 28,200 / hr.
****BTU Input:	11,600 to 38,700 / hr.
Vent Size:	3 or 4 inches, "L" or "PL"
Hopper Capacity:	45 lbs.
Fuel	Wood Pellets
* Weighted average LHV efficiency using data collected during EPA emissions test.	
**Weighted average HHV efficiency using data collected during EPA emissions test.	
***A range of BTU outputs based on EPA Default Efficiency and the burn rates from the low and high EPA tests.	
****Based on the maximum feed rate per hour multiplied by approximately 8600 BTU's which is the average BTU's from a pound of pellets.	

C. Glass Specifications

This appliance is equipped with 5mm ceramic glass. Replace glass only with 5mm ceramic glass. Please contact your dealer for replacement glass.

D. Electrical Rating

115 VAC, 60 Hz, Start 4.1 Amps, Run 1.1 Amps

NOTE: Some generator or battery back-up systems may not be compatible with the micro-processor electronics on this appliance. Please consult the power supply manufacturer for compatible systems.

E. Mobile Home Approved

- This appliance is approved for mobile home installations when not installed in a sleeping room and when an outside combustion air inlet is provided.
- The structural integrity of the mobile home floor, ceiling, and walls must be maintained.
- The appliance must be properly grounded to the frame of the mobile home and use only Listed pellet vent Class "L" or "PL" connector pipe.
- Outside Air Kit, part OAK-ACC must be installed in a mobile home installation.

⚠ WARNING

Fire Risk.

Hearth & Home Technologies disclaims any responsibility for, and the warranty will be voided by, the following actions:

- Installation and use of any damaged appliance.
- Modification of the appliance.
- Installation other than as instructed by Hearth & Home Technologies.
- Installation and/or use of any component part not approved by Hearth & Home Technologies.
- Operating appliance without fully assembling all components.
- Operating appliance without legs attached (if supplied with appliance).
- Do NOT Over fire - If appliance or chimney connector glows, you are over firing.

Any such action that may cause a fire hazard.

Improper installation, adjustment, alteration, service or maintenance can cause injury or property damage.

For assistance or additional information, consult a qualified installer, service agency or your dealer.

NOTE: Hearth & Home Technologies, manufacturer of this appliance, reserves the right to alter its products, their specifications and/or price without notice.

Quadra-Fire is a registered trademark of Hearth & Home Technologies.

Install Guide

2 Getting Started

A. Design, Installation & Location Considerations

1. Appliance Location

NOTICE: *Check building codes prior to installation.*

- Installation MUST comply with local, regional, state and national codes and regulations.
- Consult insurance carrier, local building inspector, fire officials or authorities having jurisdiction over restrictions, installation inspection and permits.

It is a good idea to plan your installation on paper, using exact measurements for clearances and floor protection, before actually beginning the installation. Location of the appliance and chimney will affect performance.

Consideration must be given to:

- Safety, convenience, traffic flow
- Placement of the chimney and chimney connector and to minimize the use of chimney offsets.
- Place the appliance where there will be a clear passage for a Listed chimney through the ceiling and roof (vertical) or through exterior wall (horizontal).
- Installing the required outside air kit will affect the location of the vent termination.

When locating vent and venting termination, the ideal location is to vent above roof line when possible. This minimizes the affects of wind loading.

Since pellet exhaust can contain ash, soot or sparks, you must consider the location of:

- Windows
- Air Intakes
- Air Conditioner
- Overhang, soffits, porch roofs, adjacent walls
- Landscaping, vegetation
- Horizontal or vertical vent termination

2. Floor Support

The supporting floor under the appliance must be able to handle the weight of the appliance, fuel load and the weight of the chimney.

Ensure that your floor will support these weights prior to installation. Add sufficient additional support to meet this weight requirement prior to installation. The weight of the appliance is 252 lbs.

CAUTION

If burning shelled field corn, you must use approved venting specifically designed for corn to prevent corrosion or degradation. Follow the instructions from the venting manufacturer.

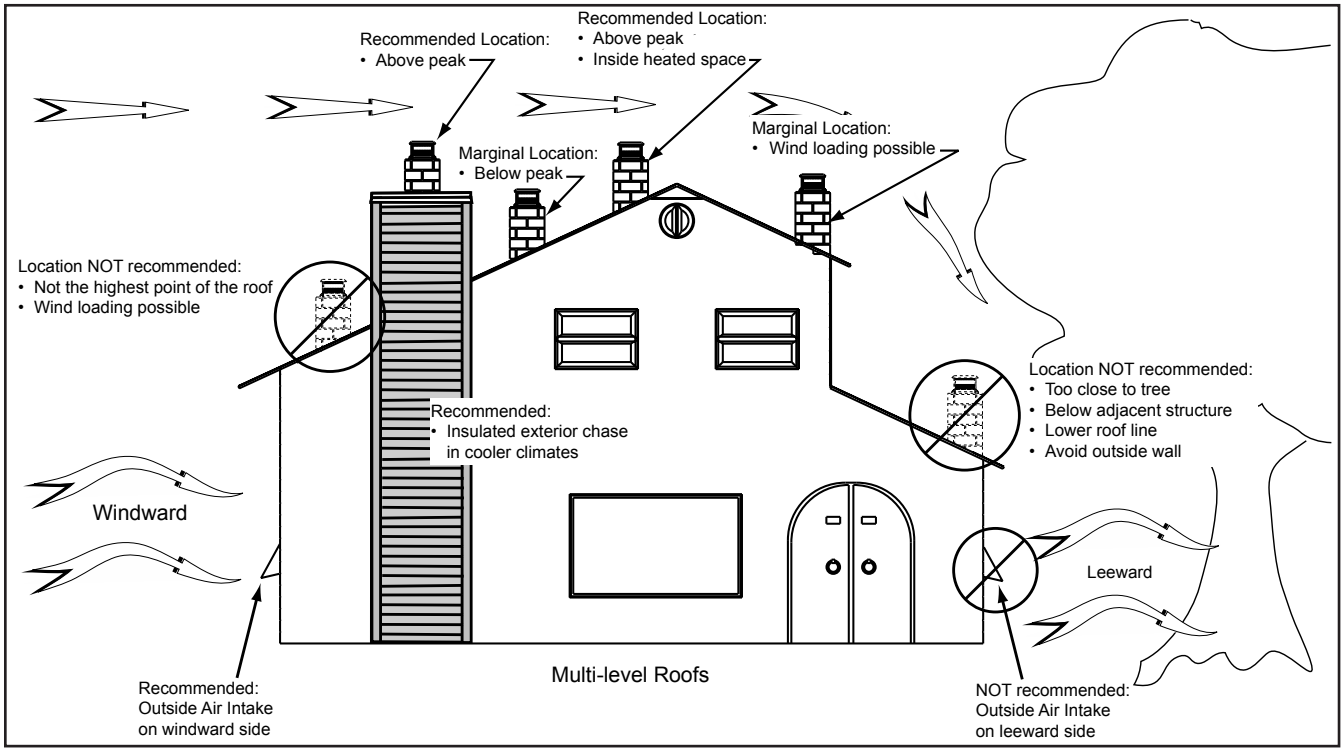

Figure 4.1

B. Thermostat Wall Control Location

The thermostat wall control's location will have some affect on the appliance's operation.

- Maximum wire length from appliance is 100 feet (30.48m) continuous non-spliced wire. Recommended 20 gauge wire, solid copper .
- When located close to the appliance, it may require a slightly higher temperature setting to keep the rest of the house comfortable.
- When located in an adjacent room or on a different floor level, you will notice higher temperatures near the appliance.

C. Tools And Supplies Needed

Tools and building supplies normally required for installation, unless installing into an existing masonry fireplace:

Reciprocating Saw	Channel Locks
Hammer	Phillips Screwdriver
Tape Measure	Plumb Line
1/4" Self-Tapping Screws	Framing Material
Hi-temp Caulking Material	Gloves
Safety Glasses	Framing Square
Electric Drill & Bits (1/4")	Level
May also need:	
Vent Support Straps	Venting Paint

D. Inspect Appliance and Components

- Open the appliance and remove all the parts and articles packed inside the Component Pack. Inspect all the parts and glass for shipping damage.
- Report to your dealer any parts damaged in shipment.
- All labels have been removed from the glass door.
- Plated surfaces have been wiped clean with a soft cloth, if applicable.
- **Read all the instructions before starting the installation. Follow these instructions carefully during the installation to ensure maximum safety and benefit.**
- **Follow pipe manufacturer instructions for installation and air clearance requirements.**

⚠ WARNING

Fire Risk.

Damaged parts could impair safe operation. Do NOT install damaged, incomplete or substitute components.

⚠ WARNING

Hearth & Home Technologies disclaims any responsibility for, and the warranty will be voided by, the following actions:

- Installation and use of any damaged appliance.
- Modification of the appliance.
- Installation other than as instructed by Hearth & Home Technologies.
- Installation and/or use of any component part not approved by Hearth & Home Technologies.
- Operating appliance without fully assembling all components.
- Operating appliance without legs attached (if supplied with appliance).
- Do NOT Over fire

Or any such action that may cause a fire hazard.

E. Install Checklist

ATTENTION INSTALLER:

Follow this Standard Work Checklist

This standard work checklist is to be used by the installer in conjunction with, not instead of, the instructions contained in this installation manual.

Customer: _____

Date Installed: _____

Lot/Address: _____

Location of Appliance: _____

Installer: _____

Dealer/ Distributor Phone #: _____

Serial #: _____

Model : _____

WARNING! Risk of Fire or Explosion! *Failure to install appliance according to these instructions can lead to a fire or explosion.*

Appliance Install	**YES**	**IF NO, WHY?**
Verified clearances to combustibles.	☐	_____
Appliance is leveled and connector is secured to appliance.	☐	_____
Hearth extension size/height decided.	☐	_____
Outside air kit installed.	☐	_____
Floor protection requirements have been met.	☐	_____
If appliance is connected to a masonry chimney, it should be cleaned and inspected by a professional. If installed to a factory built metal chimney, the chimney must be installed according to the manufacturer's instructions and clearances.	☐	_____
Chimney		
Chimney configuration complies with diagrams.	☐	_____
Chimney installed, locked and secured in place with proper clearance.	☐	_____
Chimney meets recommended height requirements (14-16 feet).	☐	_____
Roof flashing installed and sealed.	☐	_____
Terminations installed and sealed.	☐	_____
Clearances		
Combustible materials not installed in non-combustible areas.	☐	_____
Verified all clearances meet installation manual requirements.	☐	_____
Mantels and wall projections comply with installation manual requirements.	☐	_____
Protective hearth strips and hearth extension installed per manual requirements.	☐	_____
Appliance Setup		
All packaging and protective materials removed.	☐	_____
Firebrick, baffle and ceramic blanket installed correctly.	☐	_____
All labels have been removed from the door.	☐	_____
All packaging materials are removed from inside/under the appliance.	☐	_____
Manual bag and all of its contents are removed from inside/under the appliance and given to the party responsible for use and operation.	☐	_____

Hearth & Home Technologies recommends the following:

- Photographing the installation and copying this checklist for your file.
- That this checklist remain visible at all times on the appliance until the installation is complete.

Comments: Further description of the issues, who is responsible (Installer/Builder/Other Trades, etc.) and corrective action needed:

Comments communicated to party responsible _____ by _____ on _____

(Builder/Gen. Contractor) (Installer) (Date)

3 Dimensions and Clearances

A. Appliance Dimensions

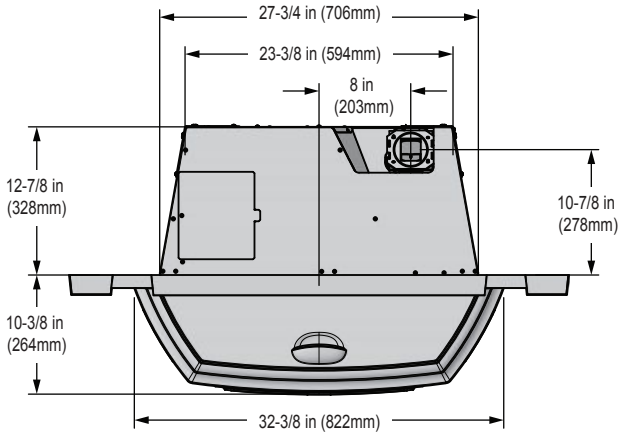

Figure 7.1 - Top View with Cast Panel Set

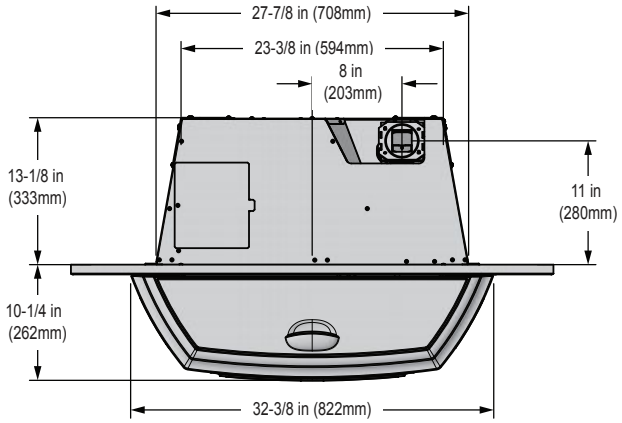

Figure 7.3 - Top View with Small Surround Panel Set

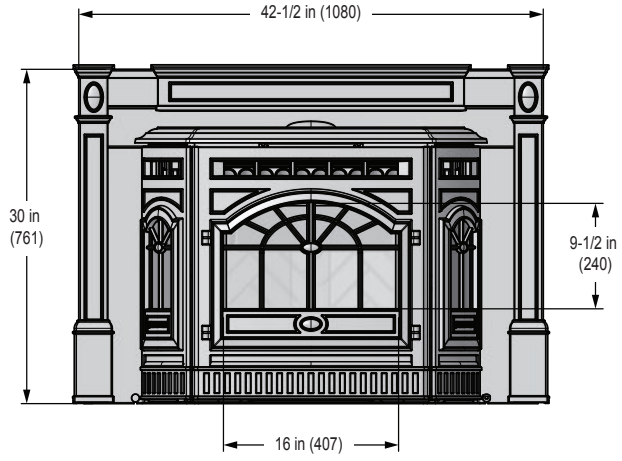

Figure 7.2- Front View with Small Surround and Cast Panel Set

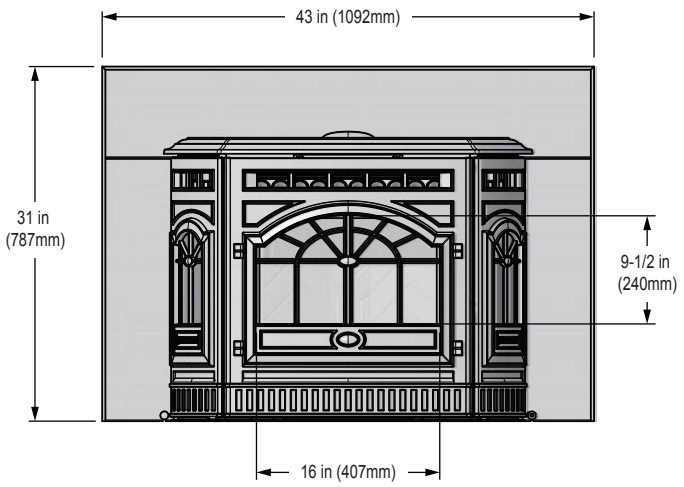

Figure 7.4- Front View with Small Surround Panel Set

A. Appliance Dimensions (continued)

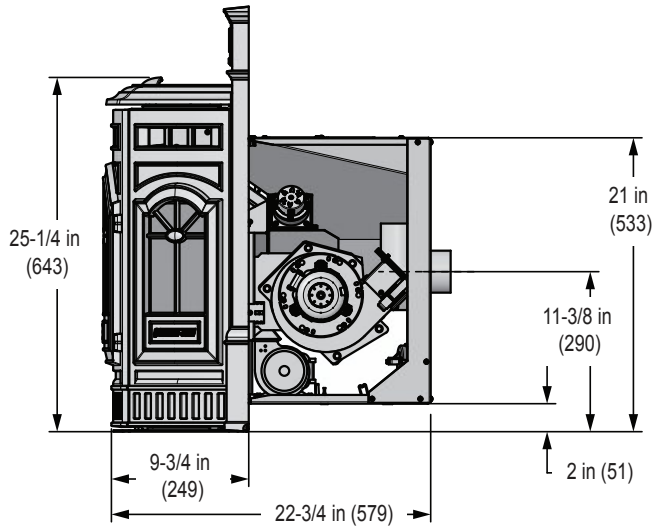

Figure 8.1 -Side View with Small or Large Surround and Cast Panel Set

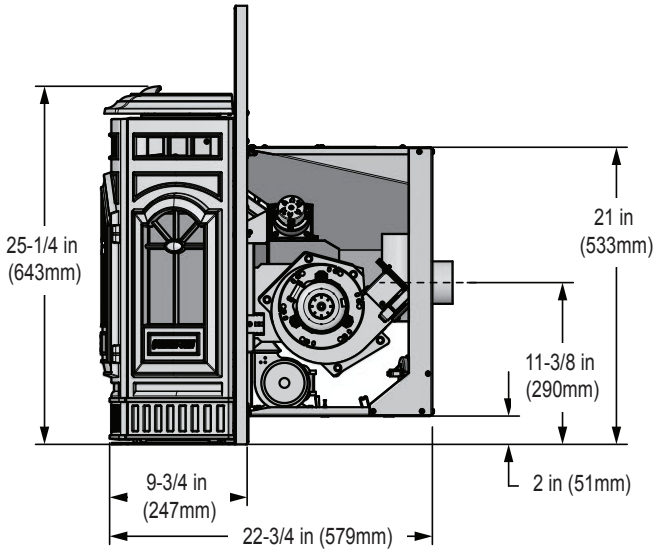

Figure 8.3 -Side View with Small or Large Surround Panel Set

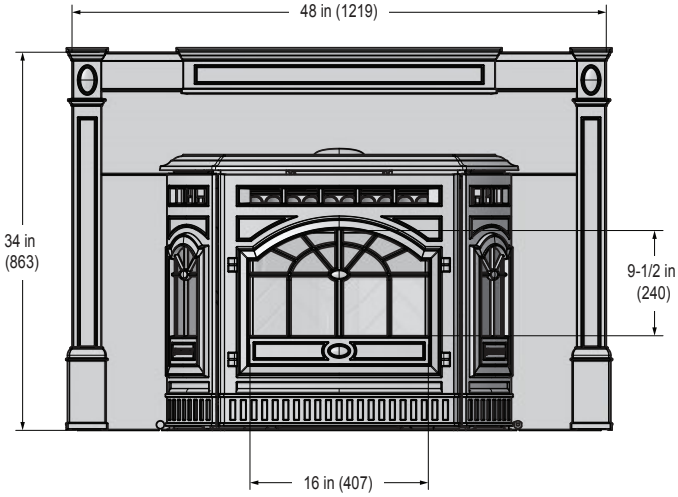

Figure 8.2- Front View with Large Surround and Cast Panel Set

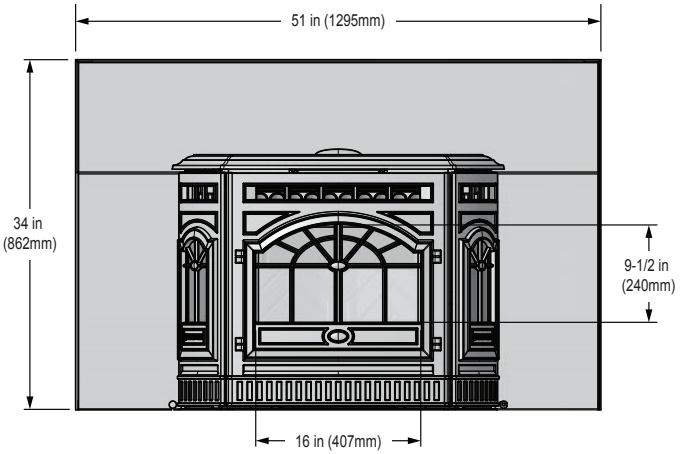

Figure 8.4- Front View with Large Surround Panel Set

B. Clearance To Combustibles, UL and ULC

AS A BUILT-IN - FRAMING DIMENSIONS

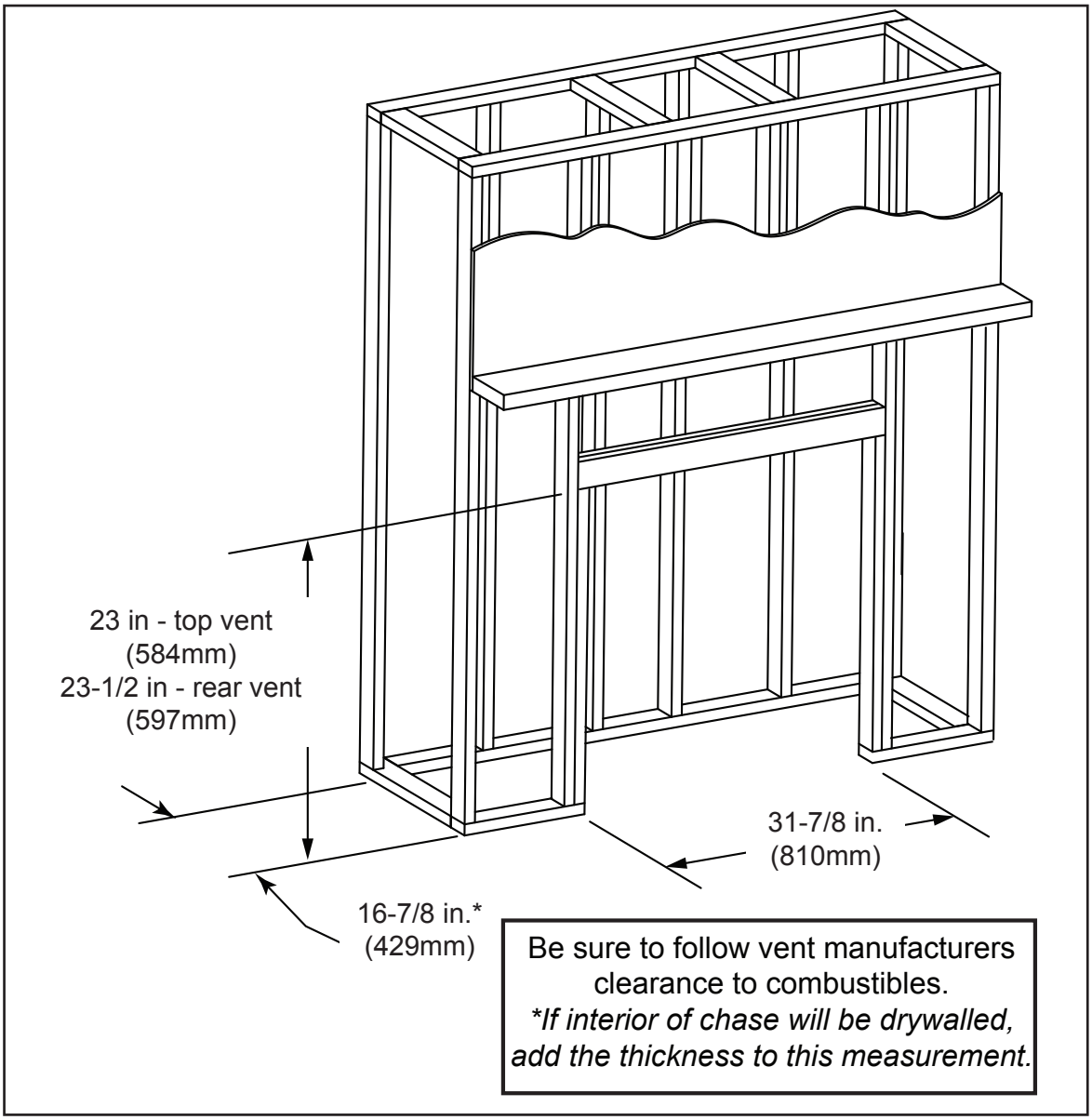

Figure 9.1

WARNING

Fire Risk.

Comply with all minimum clearances to combustibles as specified.

Failure to comply may cause house fire.

NOTE:

- Illustrations reflect typical installations and are FOR DESIGN PURPOSES ONLY.
- Illustrations/diagrams are not drawn to scale.
- Actual installation may vary due to individual design preference.

C. Masonry and Zero Clearance Fireplaces

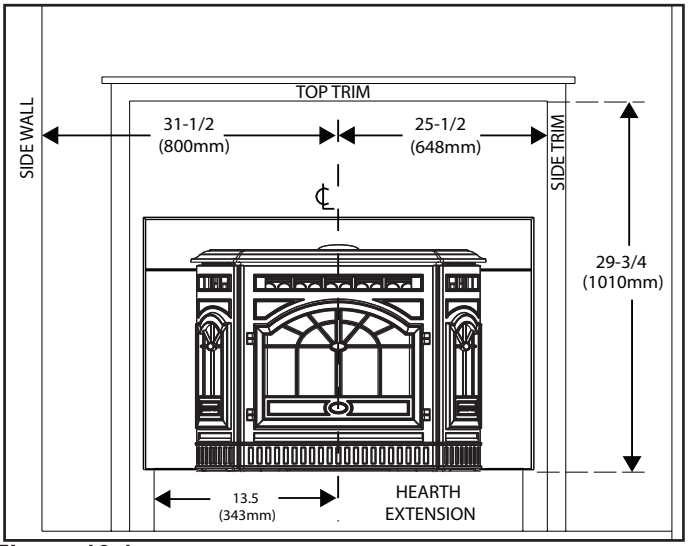

Figure 10.1

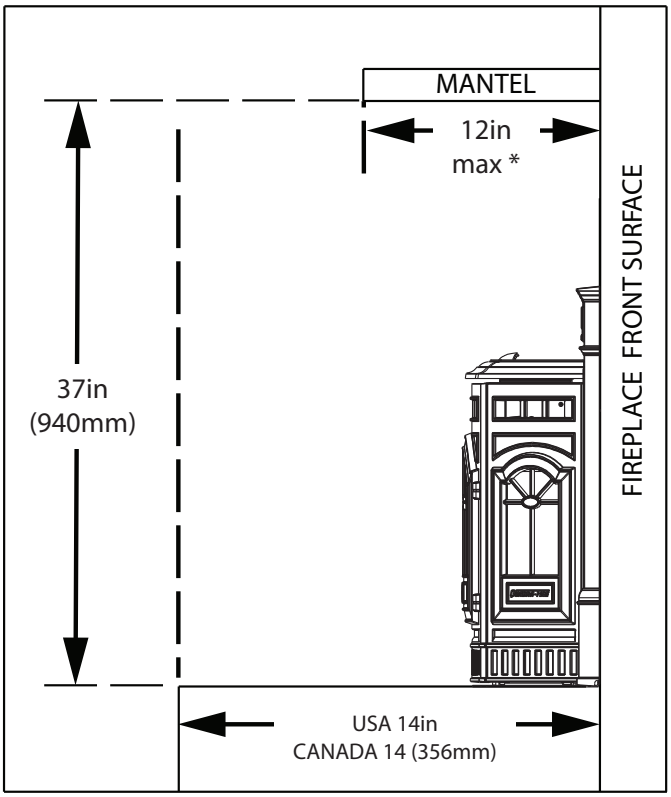

Figure 10.2

NOTE

It is necessary to permanently seal any opening between the masonry of the fireplace and the facing masonry.

D. Minimum Opening for Masonry and Zero Clearance Fireplaces

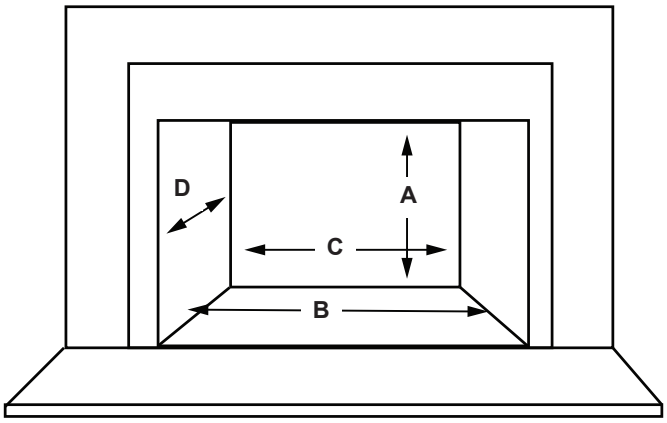

Figure 10.3

	Location	Inches	Millimeters
A	Height	21-1/4	540
B	Front Width *(Steel Panel Set)*	28-1/8	714
	Front Width *(Cast Panel Set)*	28	711
C	Rear Width	23-5/8	600
D	Depth *(Steel Panel Set)*	13-3/8	340
	Depth *(Cast Panel Set)*	13-1/8	333

E. Installation into a Factory-Built Fireplace

The following modifications are permissible:

- Removal of damper or locked in open position
- Removal of smoke shelf or baffle
- Removal of ember catches
- Removal of fire grate
- Removal of view screen/curtain
- Removal of doors
- Removal of factory-built fireplace floor

- External trim pieces which do not affect the operation of the fireplace may be removed providing they can be stored on or within the fireplace for reassembly if the insert is removed.
- The permanent metal warning label provided must be attached to the back of the fireplace, with screws or nails, stating that the fireplace may have been altered to accommodate the insert, and must be returned to original condition for use as a conventional fireplace. **Figure 10.1**

WARNING

THIS FIREPLACE MAY HAVE BEEN ALTERED TO ACCOMMODATE AN INSERT. IT MUST BE RETURNED TO ITS ORIGINAL CONDITION BEFORE USE AS A SOLID FUEL BURNING FIREPLACE.

250-2061

Figure 11.1

- If the hearth extension is lower than the fireplace opening, the portion of the insert extending onto the hearth must be supported.
- Manufacturer designed adjustable support kit can be ordered from your dealer.

NOTE: Refer to chimney liner manufacturer for recommendations on supporting the liner. Installation into fireplaces without a permit will void the listing.•

- The firebrick (refractory), glass doors, screen rails, screen mesh and log grates can be removed from a factory-built firebox in order to gain minimum insert opening requirements.
- Any smoke shelves, shields and baffles may be removed from a factory-built firebox if attached with mechanical fasteners.
- The metal floor of the factory-built firebox may be removed to facilitate the installation of the insert only when a 1 inch (25mm) airspace is provided between the insert and the floor of outer wrap.

The following is only one example as there are many different models of factory-built fireplaces.

NOTE: This example is for reference only. Any modifications must not compromise the structural integrity or reduce the protection for combustible materials.

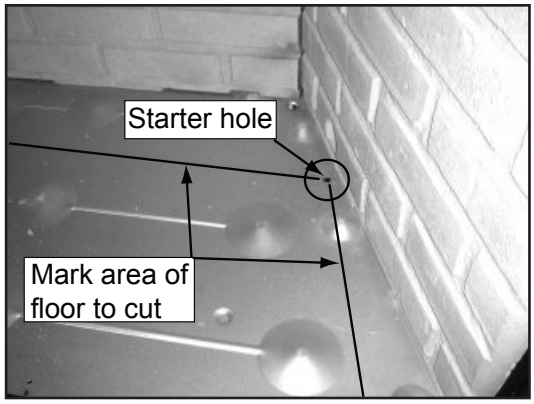

Figure 11.2. Measure and mark the metal floor for cutting. With a drill, make a starter hole in each corner.

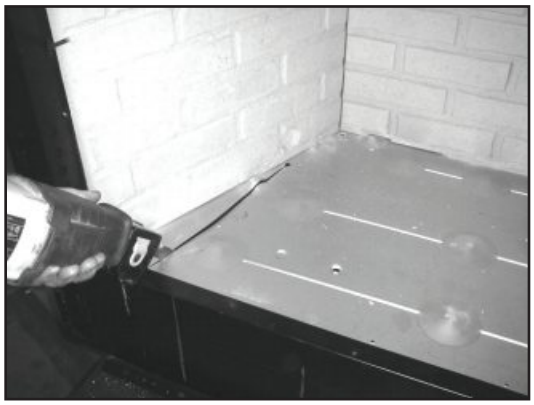

Figure 11.3. Using a saws-all, cut out the floor.

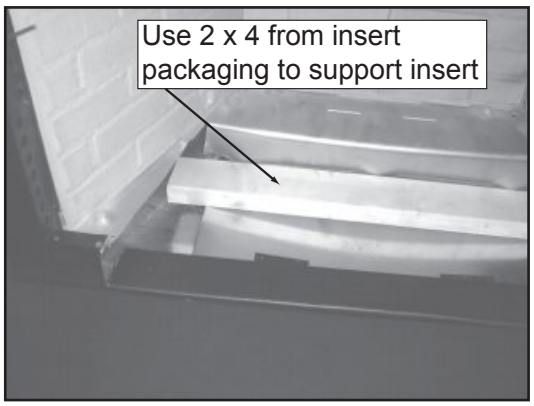

Figure 11.4. If the floor is made of thin metal, we recommend using the 2 x 4 from the insert packaging to support the insert. The 2 x 4 may need to be cut to the appropriate size.

Example Removal of Factory-Built Fireplace Cont.

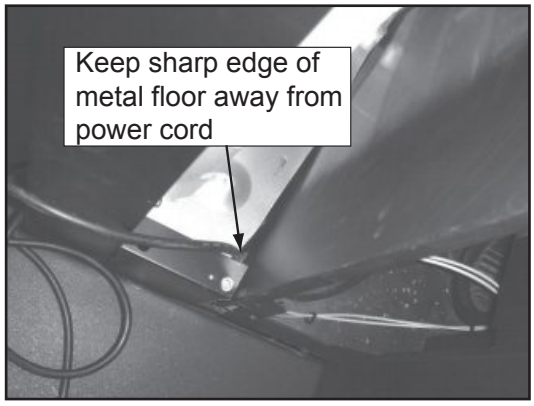

Figure 12.1. Place the insert into the factory-built firebox. Ensure that the power cord can not be damaged by the sharp metal edge. You may need to cut out a notch to accommodate the cord.

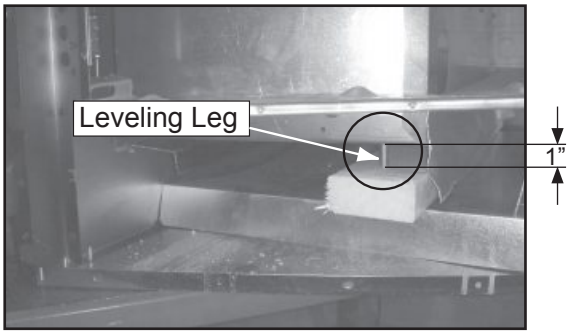

Figure 12.2. Ensure that the leveling leg is positioned over the 2 x 4 before leveling the insert. Minimum 1” clearance.

F. Installation into a Masonry Fireplace

All modifications that can be made to a Factory Built Fireplace can be made to a Masonry Fireplace.

In addition **DO NOT** remove any brick or mortar from the existing fireplace.

⚠ WARNING

- Removing floor of fireplace must not weaken structure of firebox or reduce protection for combustible materials.
- Final approval of this installation type is contingent upon the appropriate local authority having jurisdiction.

G. Prefabricated Metal Chimney

The chimney can be new or existing, masonry or prefabricated and must meet the following minimum requirements:

- Must be minimum 6 inch (152mm) inside diameter of high temperature chimney listed to UL 103 HT (2100°F) or ULC-S628.
- Must use components required by the manufacturer for installation.
- Must maintain clearances required by the manufacturer for installation.
- Refer to manufacturers instructions for installation
- This insert is listed to ASTM E 1509-12 Standard and is approved for installation into listed factory-built zero clearance fireplaces listed to UL 127 conforming to the following specifications and instructions:
- The original factory-built clearance fireplace chimney cap must be re-installed after installing the approved chimney liner meeting type UL 103 HT requirements (2100°F) per UL 1777.
- If the chimney is not listed as meeting HT requirements, or if the factory built fireplace was tested prior to 1998, a full height listed chimney liner must be installed from the appliance flue collar to the chimney top.
- The liner must be securely attached to the insert flue collar and the chimney top.
- The air flow of the factory-built zero-clearance fireplace system must not be altered. The flue liner top support attachment must not reduce the air flow for the existing air-cooled chimney system.
- No dilution air is allowed to enter the chimney.

1. Secure the fireplace damper in the open position. If this cannot be accomplished, it will be necessary to remove the damper
2. Seal damper area of chimney around chimney connector with a high temperature sealant or seal insert against the face of the fireplace.
3. Both methods must be removable and replaceable for cleaning and re-installation.

⚠ WARNING

Risk of Fire!

Follow venting manufacturer’s clearances and instructions when installing venting system.

NOTICE: In Canada when using a factory-built chimney it must be safety listed, **Type UL103 HT (2100°F) [1149°C] CLASS “A”** or conforming to **CAN/ULC-S629M, STANDARD FOR 650°C FACTORY-BUILT CHIMNEYS.**

4 Vent Information

A. Venting Termination Minimum Requirements

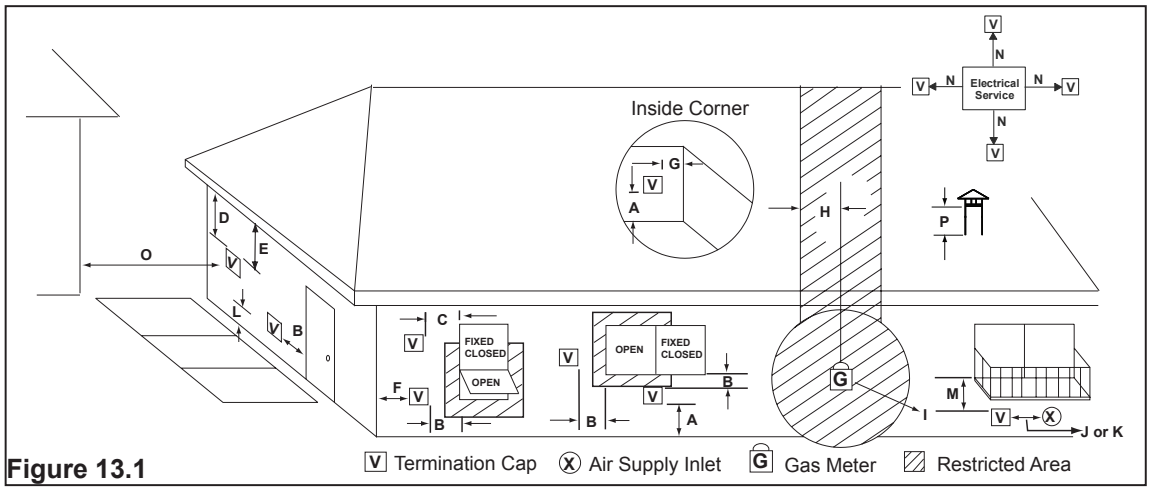

Figure 13.1

All minimum clearances are listed with an Outside Air Kit (OAK) installed, unless otherwise noted in table below.

A	12 in.	Above Finish Grade (the grade surface must be a non-combustible material
B	48 in. no OAK	Open door or window: below or to the side
B	12 in.	Open door or window: above
C	6 in.	Permanently closed window: above, below or to the side
D	36 in. no OAK	Vertical clearance to a ventilated soffit located above the terminal within a horizontal distance of 2 ft from the center-line of the terminal
E	12 in.	Clearance to unventilated soffit
F	12 in.	Clearance to outside corner
G	12 in.	Clearance to inside corner
H	36 in.	Above gas meter/regulator measured from horizontal center-line of regulator
I	36 in. USA 72 in. Canada	Clearance to service regulator vent outlet
J	12 in. 48 in. no OAK	Clearance to non-mechanical air supply inlet to the building or the combustions air inlet to any other appliance
K	10 ft horizontal 3 ft vertical	Clearance to mechanical air supply
L	7 ft.	Above paved sidewalk, paved driveway located on **public** property
M	12 in.	Under an open veranda, porch, deck or balcony
N	See Note below*	Electric service: above, below or to the side (location must not obstruct or interfere with access)
O	24 in.	Adjacent building, fences and protruding parts of the structure
P	12 in.	Clearance above roof line for vertical terminations

***NOTE:** Consult local building, fire officials or authorities having jurisdiction. Local codes or regulations may require different clearances.

24 in.	Above grass, top of plants, wood or any other combustible
36 in. no OAK	Clearance from any forced air intake of other appliance
12 in.	Clearance horizontally from combustible wall
15 in.	Vented directly through a wall, minimum length of horizontal pipe
6 in. horizontal 12 in. vertical	Minimum horizontal or vertical terminations must protrude from wall

NOTICE:

Do NOT Terminate Vent:

- In any location that will allow flue gases or soot from entering or staining the building
- In any location which could create a nuisance or hazard
- In any enclosed or semi-enclosed area such as a carport, garage, attic, crawl space, under a sun deck or porch, narrow walkway
- Closely fenced area, or any location that can build up a concentration of fumes such as a stairwell, covered breezeway, etc.

NOTICE:

Termination must exhaust above air inlet elevation.

- It is recommended that at least 60 inches (1.52m) of vertical pipe be installed when appliance is vented directly through a wall. This will create a natural draft, which will help prevent the possibility of smoke or odor venting into the home during a power outage.
- It will also keep exhaust from causing a nuisance or hazard by exposing people or shrubs to high temperatures.
- The safest and preferred venting method is to extend the vent vertically through the roof or above the roof.

B. Avoiding Smoke and Odors

Negative Pressure, Shut-Down and Electrical Power Failure

To reduce the probability of back-drafting or burn-back in the pellet appliance during power failure or shut down conditions, it must be able to draft naturally without exhaust blower operation.

Negative pressure in the house will resist this natural draft if not accounted for in the pellet appliance installation.

Heat rises in the house and leaks out at upper levels. This air must be replaced with cold air from outdoors which flows into lower levels of the house.

Vents and chimneys into basements and lower levels of the house can become the conduit for air supply and reverse under these conditions.

Outside Air

An outside air kit is recommended in all installations. The Outside Air Kit must be ordered separately.

Per national building codes, consideration must be given to combustion air supply to all combustion appliances. Failure to supply adequate combustion air for all appliance demands may lead to back drafting of those and other appliances.

When the appliance is roof vented (strongly recommended):

The air intake is best located on the exterior wall oriented towards the prevailing wind direction during the heating season.

When the appliance is side-wall vented:

The air intake is best located on the same exterior wall as the exhaust vent outlet and located lower on the wall than the exhaust vent outlet.

The outside air supply kit can supply most of the demands of the pellet appliance, but consideration must be given to the total house demand.

House demand may consume the air needed for the appliance. It may be necessary to add additional ventilation to the space in which the pellet appliance is located.

Consult with your local HVAC professional to determine the ventilation demands for your house.

Vent Configurations

To reduce probability of reverse drafting during shut-down conditions Hearth & Home Technologies strongly recommends:

- Installing the pellet vent with a minimum vertical run of 5 feet (1.52m). Preferably terminating above the roof line.
- Installing the outside air kit at least 4 feet (1.22m) below the vent termination.

To prevent soot damage to exterior walls of the house and to prevent re-entry of soot or ash into the house:

- Maintain specified clearances to windows, doors and air inlets, including air conditioners.
- Vents should not be placed below ventilated soffits. Run the vent above the roof.
- Avoid venting into alcove locations.
- Vents should not terminate under overhangs, decks or onto covered porches.
- Maintain minimum clearance of 12 inches (305mm) from the vent termination to the exterior wall. If you see deposits developing on the wall, you may need to extend this distance to accommodate your installation conditions.

⚠ CAUTION

- DO NOT CONNECT THIS Appliance TO A CHIMNEY FLUE SERVICING ANOTHER APPLIANCE.
- DO NOT CONNECT TO ANY AIR DISTRIBUTION DUCT OR SYSTEM.

Hearth & Home Technologies assumes no responsibility for, not does the warranty extend to, smoke damage caused by reverse drafting of pellet appliances under shut down or power failure conditions.

C. Negative Pressure

Negative pressure results from the imbalance of air available for the appliance to operate properly. It can be strongest in lower levels of the house.

Causes include:

- Exhaust fans (kitchen, bath, etc.)
- Range hoods
- Combustion air requirements for furnaces, water appliances and other combustion appliances
- Clothes dryers
- Location of return-air vents to furnace or air conditioning
- Imbalances of the HVAC air handling system
- Upper level air leaks such as:
  - Recessed lighting
  - Attic hatch
  - Duct leaks

To minimize the effects of negative air pressure:

- Install the outside air kit with the intake facing prevailing winds during the heating season
- Ensure adequate outdoor air for all combustion appliances and exhaust equipment
- Ensure furnace and air conditioning return vents are not located in the immediate vicinity of the appliance
- Avoid installing the appliance near doors, walkways or small isolated spaces
- Recessed lighting should be a “sealed can” design
- Attic hatches weather stripped or sealed
- Attic mounted duct work and air handler joints and seams taped or sealed

⚠ WARNING

Risk of Asphyxiation!

Negative pressure can cause spillage of combustion fumes and soot.

D. Draft

Draft is the pressure difference needed to vent an appliance successfully. When an appliance is drafting successfully, all combustion byproducts are exiting the home through the chimney.

Install through the warm airspace enclosed by the building envelope. This helps to produce more draft, especially during lighting and die-down of the fire.

Considerations for successful draft include:

- Preventing negative pressure
- Location of appliance and chimney

***NOTICE:** Hearth & Home Technologies assumes no responsibility for the improper performance of the chimney system caused by:*

- *Inadequate draft due to environmental conditions*
- *Down drafts*
- *Tight sealing construction of the structure*
- *Mechanical exhausting devices*

E. Chimney and Exhaust Connection

1. **Chimney & Connector**: Use 3 or 4 inch (76-102mm) diameter type “L” or “PL” venting system. It can be vented vertically or horizontally.
2. **Mobile Home:** Approved for all Listed pellet vent. If using the 3 inch (76mm) vertical Top Vent Adapter Kit or the 3 to 6 inch (76-152mm) Top Vent Offset Adapter, use Listed double wall flue connector. A Quadra-Fire Outside Air Kit must be used with manufactured home installations.
3. **Residential:** The 3 inch (76mm) vertical Top Vent Adapter Kit and the 3 to 6 inch (76-152mm) Top Vent Offset Adapter are tested to use 24 gauge single wall flue connector or Listed double wall flue connector to Class A Listed metal chimneys, or masonry chimneys meeting International Residential Code standards for solid fuel appliances.
4. **INSTALL VENT AT CLEARANCES SPECIFIED BY THE VENT MANUFACTURER.**
5. Secure exhaust venting system to the appliance with at least 3 screws. Also secure all connector pipe joints with at least 3 screws through each joint.
6. DO NOT INSTALL A FLUE DAMPER IN THE EXHAUST VENTING SYSTEM OF THIS Appliance.
7. DO NOT CONNECT THIS Appliance TO A CHIMNEY FLUE SERVING ANOTHER APPLIANCE.

NOTE: All pipe must be welded seam pipe whenever possible. Seal pipe joints with high temperature silicone (500°F [260°C] minimum rated only).

NOTE: If burning shelled field corn, you must use approved venting specifically designed for corn. Follow the instructions from the venting manufacturer.

F. Equivalent Feet of Pipe

The table below can help you calculate the equivalent feet of pipe which6 is a method used to determine pellet vent size. **Figure 16.1.**

⚠ WARNING

Vent surfaces get HOT, can cause burns if touched. Non-combustible shielding or guards may be required.

Example of 3 Elbow-Rear Vent Termination Calculation

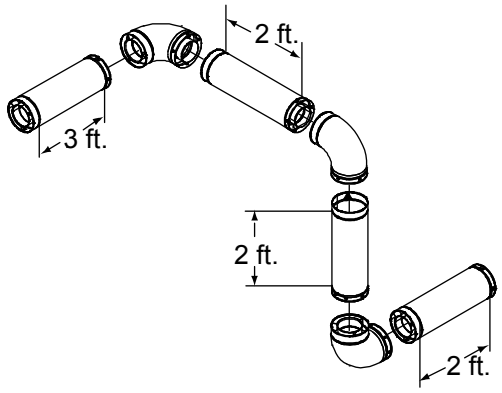

Pellet Venting Component	# of Elbows	Feet of Pipe	Multiplied By	Equivalent Feet	Components Equivalent Feet
90° Elbow or Tee	3		X	**5**	15
45° Elbow			X	**3**	
Horizontal Pipe		7	X	**1**	7
Vertical Pipe		2	X	**0.5**	1
			Total Equivalent Feet		**23**

Note: This is a generic example and is not intended to represent any specific fuel type.

Figure 16.1

G. Pipe Selection Chart

The chart will help you in determining proper venting size according to the equivalent feet of pipe calculated previously and the altitude above sea level of this installation. **Figure 16.2.**

a. Locate the calculated equivalent feet of pipe on the vertical left side of the chart.

b. Move to the right horizontally on the chart until you reach your altitude above sea level.

c. If you fall below the diagonal line, 3 or 4 inch (76 to 102mm) pipe may be used.

d. If it is anywhere above the diagonal line, a 4 inch (102mm) diameter pipe is required.

NOTICE:

- A 90° elbow is 5 times as restrictive to the flow of exhaust gases under positive pressure as 1 foot (305mm) of horizontal pipe.
- A foot of horizontal pipe is twice as restrictive as a foot of vertical pipe.

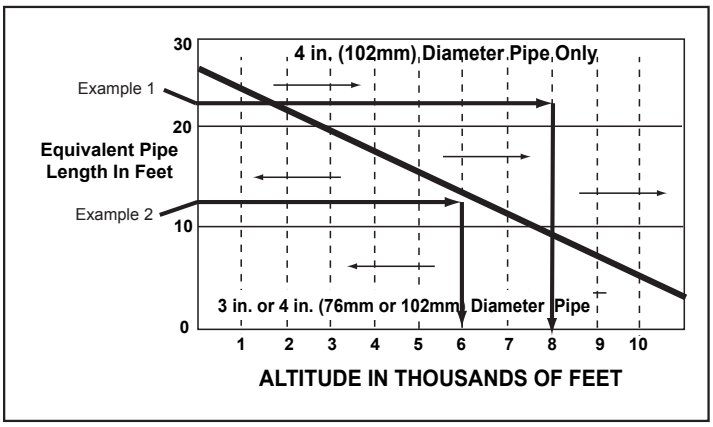

Figure 16.2

Example 1: If the equivalent length of pipe is 23 feet (7m) with altitude of 8,000 feet (2438m) you must use 4 inch (102mm) diameter type “L” or “PL” vent.

Example 2: If the equivalent length of pipe is 12 feet (3.7m) with altitude of 6,000 feet (1829m) you may use 3 or 4 inch (76 to 102mm) diameter type “L” or “PL” vent.

⚠ WARNING

Fire Risk.

- Only LISTED venting components may be used.
- NO OTHER vent components may be used.
- Substitute or damaged vent components may impair safe operation.

⚠ WARNING

RISK OF INJURY OR PROPERTY DAMAGE!

- Improper installation, adjustment, alteration, service or maintenance can cause injury or property damage.
- Refer to the owner’s information manual provided with this appliance.
- For assistance or additional information consult a qualified installer, service agency or your dealer.

H. Pellet Venting Charts

The maximum horizontal venting allowed with no vertical venting attached is 48 inches (1219mm) including one 90° elbow or two 45° elbows. This is our recommended horizontal venting installation. Addition of any horizontal venting beyond 48 inches (1219mm) Hearth & Home Technologies strongly recommends a minimum of 60 inches (1524mm) of additional vertical vent. Horizontal sections of vent pipe should have a 1/4 inch (6.35mm) rise per foot.

Hearth & Home Technologies recommends any installation requiring more than two 90° elbows, or more than 15 feet (4.5m) of venting to use 4 inch (102mm) vent.

⚠ WARNING

Fire Risk.

- Only LISTED venting components may be used.
- NO OTHER vent components may be used. Substitute or damaged vent components may impair safe operation.

45° elbow is equivalent to 1 foot of straight pipe
90° elbow is equivalent to 3 feet of straight pipe

ONE 90º ELBOW		
Total	Minimum Vertical	Vent Diameter
4	0	3
5	5	3
6	6	3
7	7	3
8	8	4
9	9	4
10	10	4
11	11	4

TWO 90º ELBOWS		
Total	Minimum Vertical	Vent Diameter
2	5	3
3	6	3
4	7	3
5	8	3
6	9	3

THREE 90º ELBOWS		
Total	Minimum Vertical	Vent Diameter
2	11	4
3	12	4

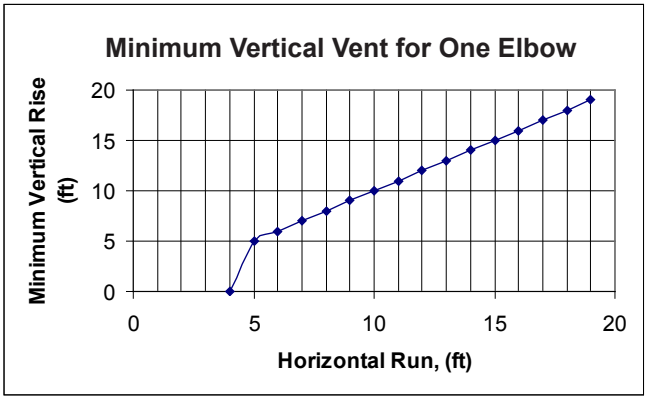

Figure 17.1

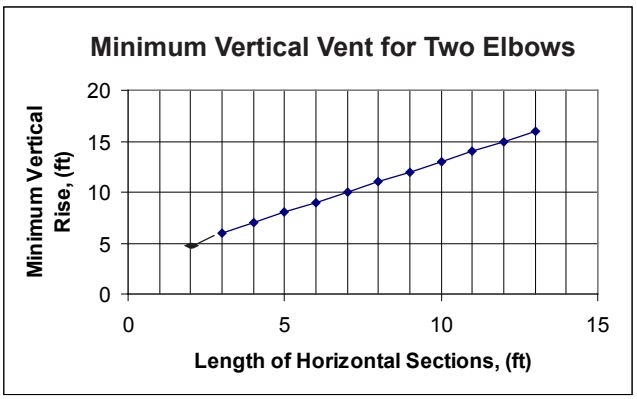

Figure 17.2

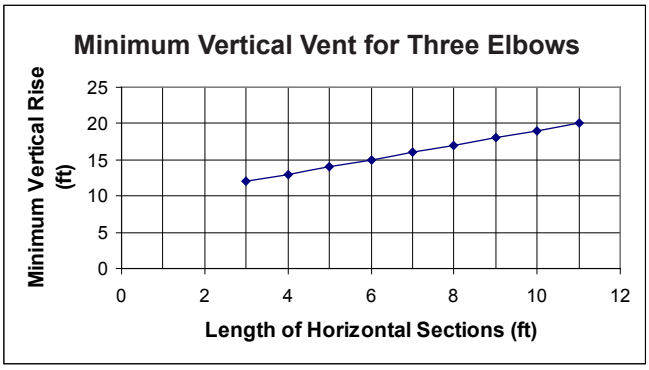

Figure 17.3

NOTICE: These are guidelines for successful venting of your pellet appliance. The more vertical rise you can obtain in your system, the better it will perform. Horizontal vent runs can accumulate ash and will need to be cleaned more often. Try to keep them as short as possible.

5 Venting Systems

A. Full Reline With Outside Air - Horizontal

CAUTION

Never draw outside combustion air from:
- Wall, floor or ceiling cavity
- Enclosed space such as an attic or garage

⚠WARNING

Fire Risk.

Inspection of Chimney:
- Masonry chimney must be in good condition.
- Meets minimum standard of NFPA 211
- Factory-built chimney must be a minimum 6 inch (152mm) UL103 HT.

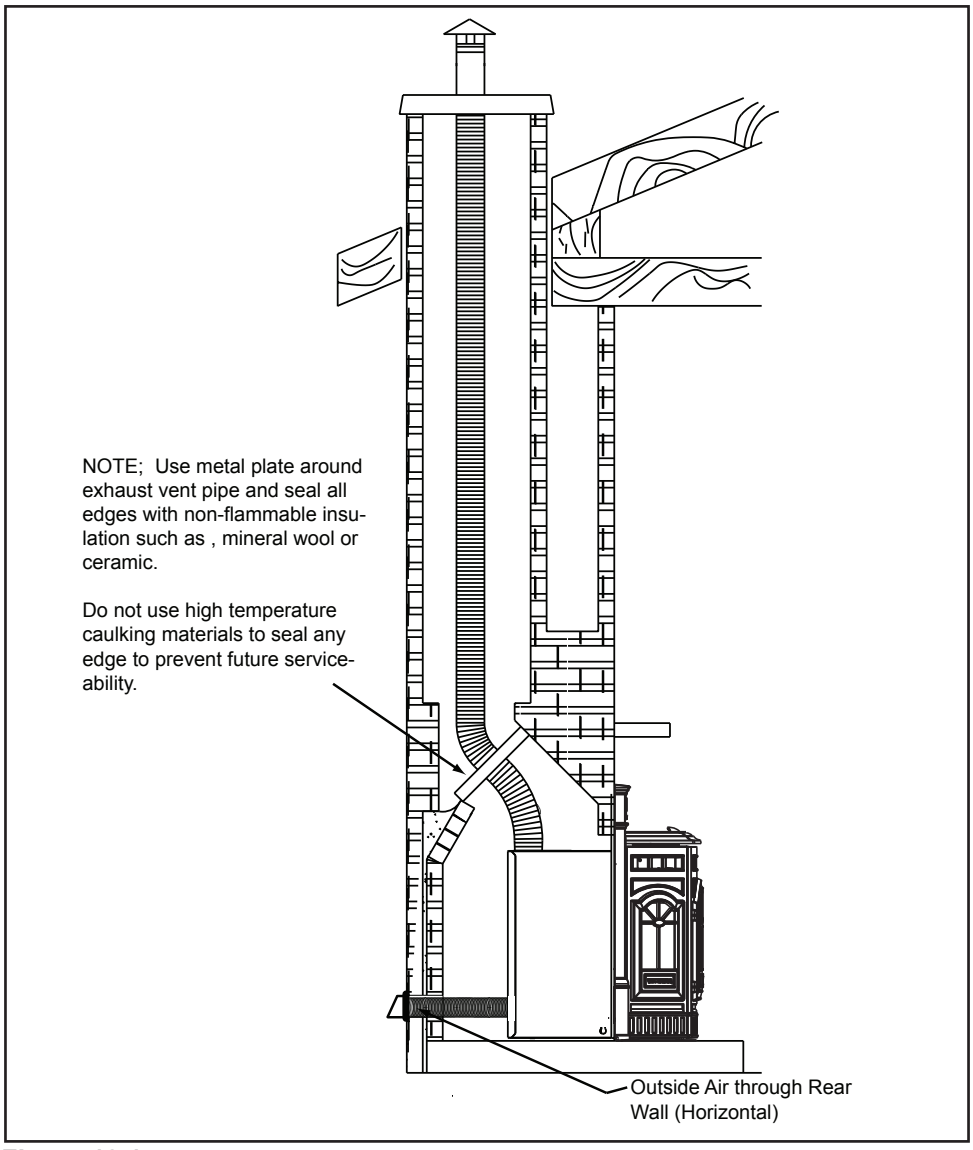

Figure 18.1

NOTE: In Canada, where passage through a wall or partition of combustible construction is desired, the installation shall conform to CAN/CSA-B365.

NOTE:
- Illustrations reflect typical installations and are FOR DESIGN PURPOSES ONLY.
- Illustrations/diagrams are not drawn to scale.
- Actual installation may vary due to individual design preference.

B. Full Reline With Outside Air - Vertical

NOTE: Check clearances carefully for this type of installation to ensure adequate room for outside air venting.

NOTE: In Canada, only a full reline is allowed per ULC S628-93, ORD ULC C1482-M1990.

CAUTION

Check building codes prior to installation.

- Installation MUST comply with local, regional, state and national codes and regulations.
- Consult local building, fire officials or authorities having jurisdiction about restrictions, installation inspection, and permits.

NOTE: In Canada this fireplace insert must be installed with a continuous chimney liner extending from the fireplace insert to the top of the chimney. The chimney liner must conform to the Class 3 requirements of CAN/ULC-S635, Standard for Lining Systems for Existing Masonry or Factory-Built Chimneys and Vents, or CAN/ULC-S640, Standard for Lining Systems for New Masonry Chimneys.

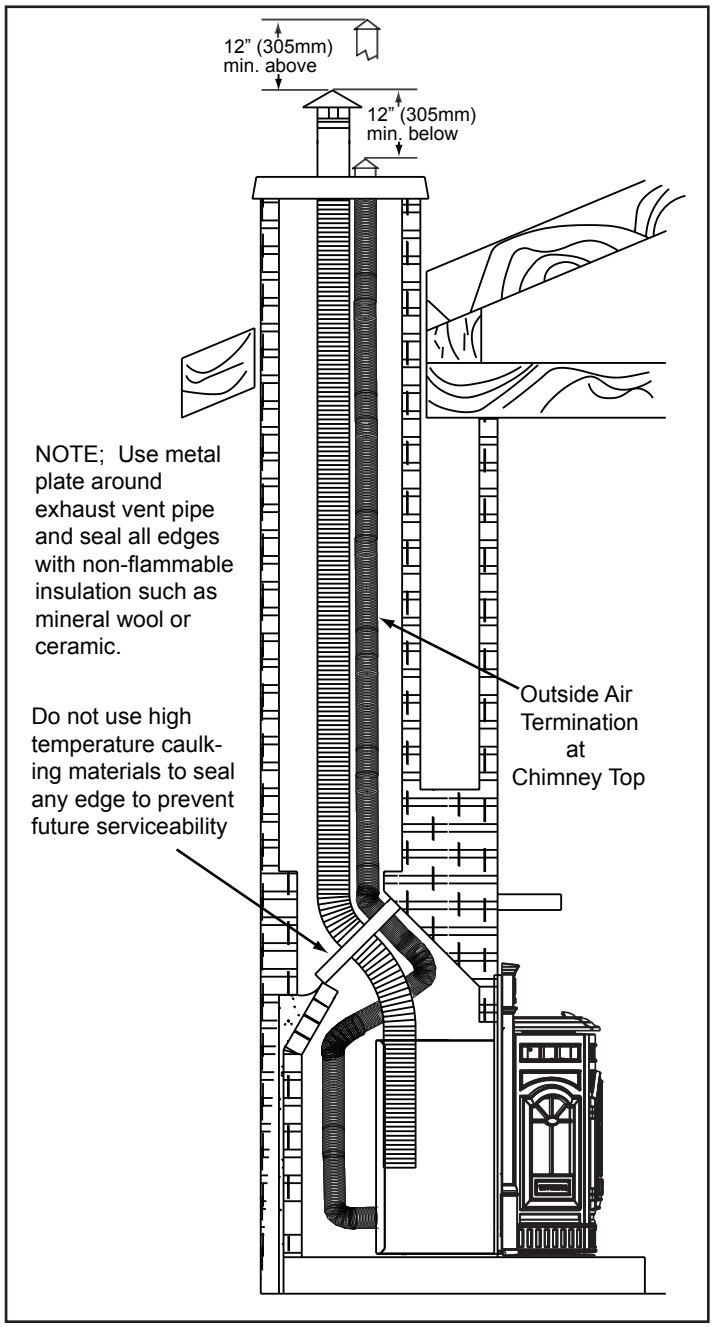

Figure 19.1

6 Appliance Set-Up

A. Leveling System

The leveling bolts are located at the rear of the appliance. To access the bolts, remove the side access panels. Reach in and turn the bolt to the desired height to level the appliance. Shown in **Figures 20.1 and 20.2.**

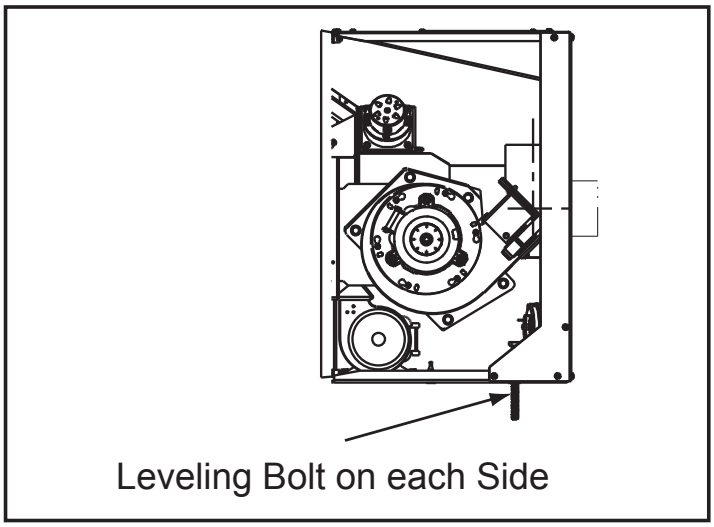

Figure 20.1

B. Outside Air Kit Instructions

Parts Included in Kit: 1 piece of 2 inch x 3 ft. flex hose, 2 hose clamps, 1 collar assembly, 1 termination cap assembly, 1 trim ring, fasteners.

Tools Needed: Phillips head screwdriver; wire cutters; hole saw or jig saw.

1. Measure distance from floor to air vent opening in appliance and mark location on wall.
2. Use saw to cut opening in wall. Cut a 2-1/2 to 3 inch (64-76mm) opening on inside wall and a 3 to 3-1/2 inch (76-89mm) opening on outside of house.
3. Use hose clamp to secure flex pipe to collar assembly.
4. Slide trim ring over flex pipe and run pipe through wall.
5. Attach hose to outside termination cap with second hose clamp.
6. Secure termination cap to outside surface.
7. Secure trim ring to interior wall.

CAUTION

Never draw outside combustion air from:
- Wall, floor or ceiling cavity
- Enclosed space such as an attic or garage

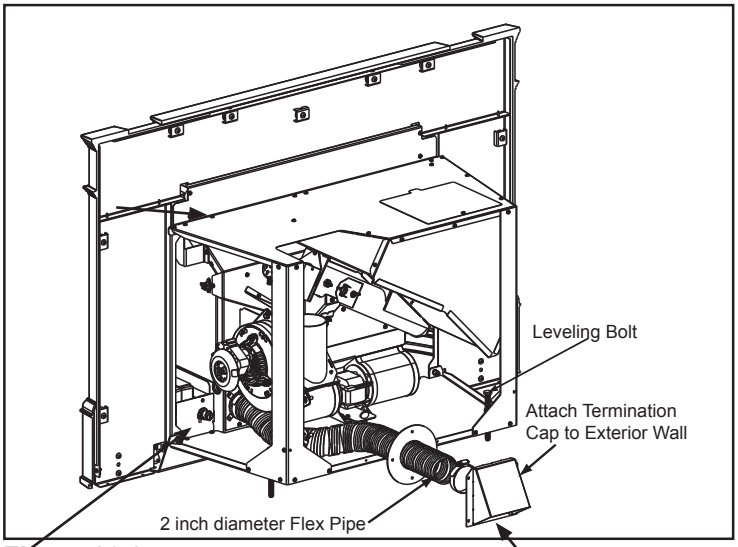

Figure 20.2

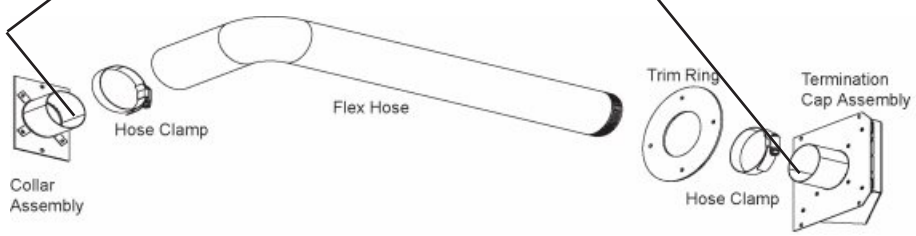

C. Door Handle Removal

Tools Required: 5/32 Allen wrench

1. Open the door. Using a 5/32 Allen wrench, loosen set screw by a couple of turns, but do not remove.
2. Push the pin completely out and remove the handle.
3. Re-install in reverse order.

D. Door Removal

1. Remove the door handle and face. Follow instructions from D above.
2. The door can now be lifted off the hinges.
3. Re-install in reverse order.

E. Adjustable Hearth Support

Size: 9"d x 45"w, 2" to 10" Height Adjustment

Included in Kit: (1) trim top, (1) trim front, (2) trim sides, double-sided tape (already installed)

Tools Needed: Phillips head screwdriver, sheet metal shears, measuring tape, gloves

1. The 10 screws on each set of scissors will already be loose when shipped. **Figure 21.1.**
2. Expand scissors to desired height. Tighten screws to hold in place using Phillips head screwdriver.
3. Measure front and side trims to required height to cover scissors and mark pieces for cutting. Cut excess material from **top** of trims edge, not bottom. This edge will be sharp; wear gloves to prevent injury to your hands. The cut edge fits under lip of top trim, so it allows for some variance in your straight edge. **Figure 21.2.**
4. The double-sided tape that holds front and side trims to scissors has a powerful bonding adhesive. Adjustments are extremely difficult once trim has adhered to tape. Do a dry run first without removing paper from tape.
5. Place cut edge of trim under top lip and into position on scissors. Place side pieces on first and then front piece. The front piece overlaps side pieces.
6. Once you are satisfied with the positioning, remove trim and set aside.
7. Remove the paper from double-sided tape that is to accept trim side. Align side and then press hard against tape to secure side piece. Repeat for other side. Install front trim piece last.
8. There are 3 holes in the back flange of the top to secure it to the wall if necessary. Use the appropriate fastener for the type of wall material, i.e., brick, sheet rock, etc.

NOTE: 3/8 inch (9.5mm) thick tile or like material can be cut to size and fit under lip of top trim edge for a decorative touch. **Figure 21.3.**

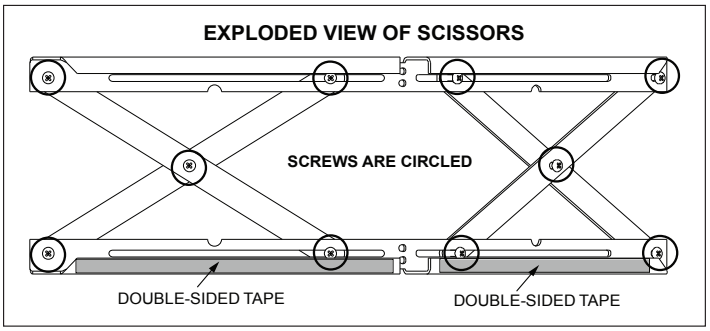

Figure 21.1

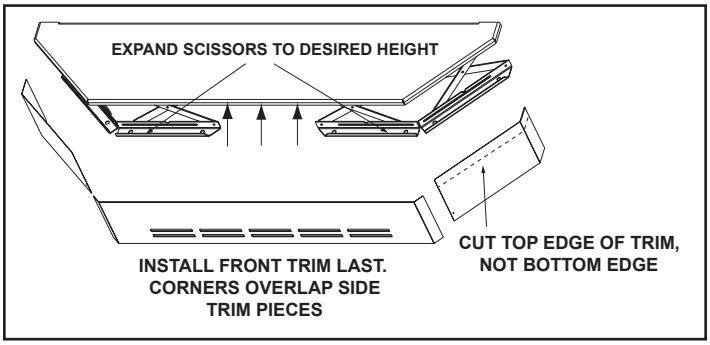

Figure 21.2

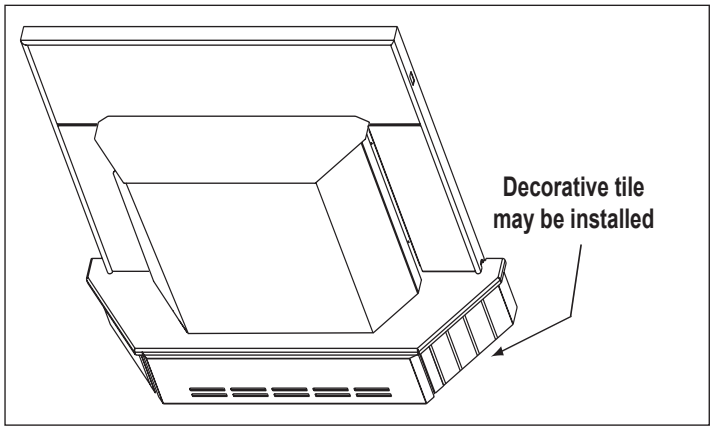

Figure 21.3

WARNING

Sheet metal trim edges will be sharp.
For safety purposes wear gloves.
Injury can occur.

F. Hearth Support for Standard Surround Only

1. Remove contents from box and lay on protective surface to avoid scratching the paint.
2. Lay hearth support front and sides face down. Bend the tab down toward the inside.
3. The side pieces are shipped flat. It is much easier to manually flex the sides into a bowed position before installing.
4. Lay 1 cast ring face up, which will become the bottom ring when installed. Attach the 2 sides FIRST and then the front piece. **Figure 22.3.**
5. Now turn the cast ring right side up and attach the top cast ring . **Figure 22.4.**
6. Attach the hearth support panel extensions. **Figure 22.5**
7. Attach cast footers. **Figure 22.6.**
8. Place the assembled hearth support under the insert. **Figure 22.7.**

Item	Description
1	Front, 3 inch
2	Front, 5 inch
3	Cast Ring, Top & Bottom, Interchangeable
4	Side, 5 inch
5	Side, 3 inch
6	Panel Extension, 5 inch
7	Panel Extension, 3 inch
8	Panel Extension, Base Plate Only

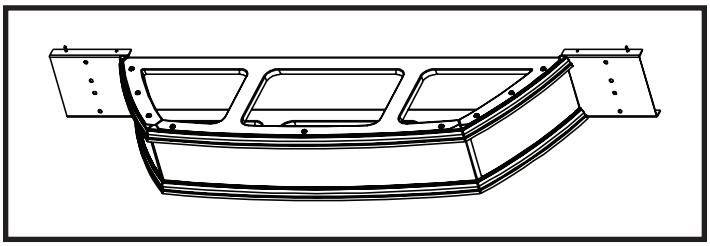

Figure 22.1 - Assembled View

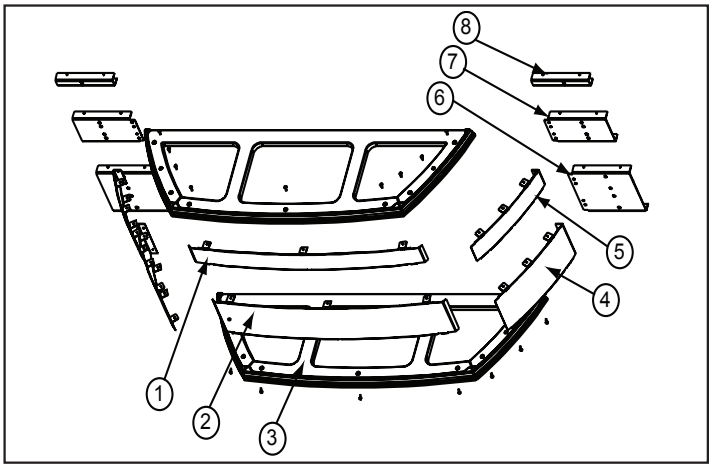

Figure 222

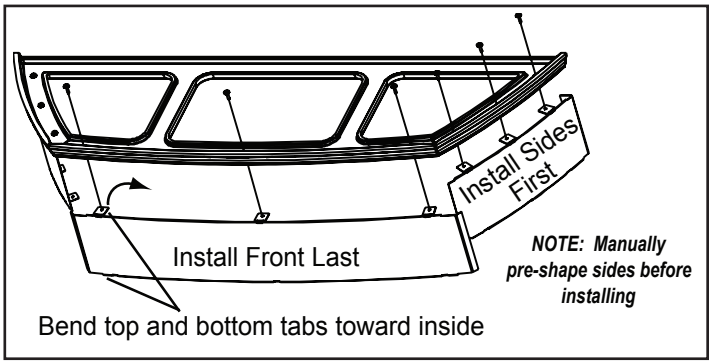

Figure 22.3

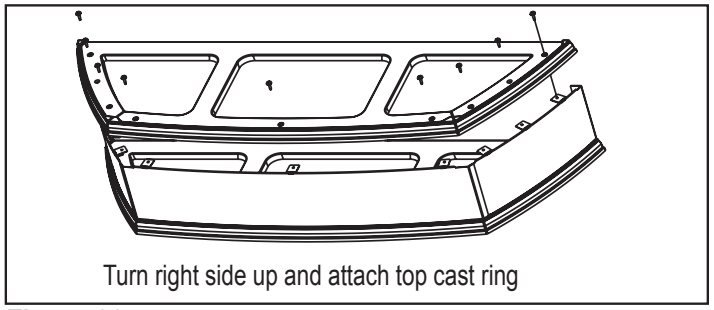

Figure 22.4

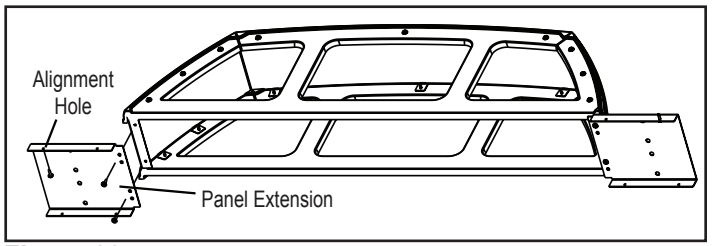

Figure 22.5

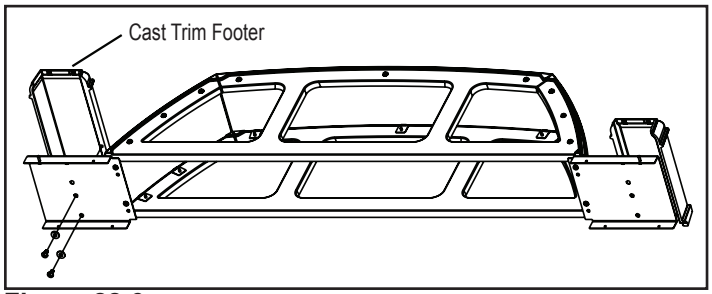

Figure 22.6

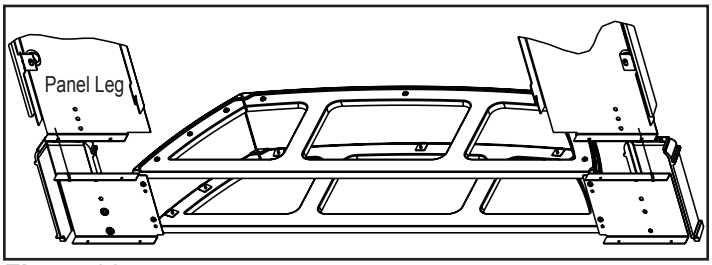

Figure 22.7

F. Hearth Support (Cont'd)

Base Plate Only Installation

Parts Needed: (1) cast ring (2) base zero clearance panel extensions. Discard balance of parts.

Tools Needed: Phillips head screwdriver

1. Attach base zero clearance panel extensions to cast ring.
2. Place assembly under appliance.

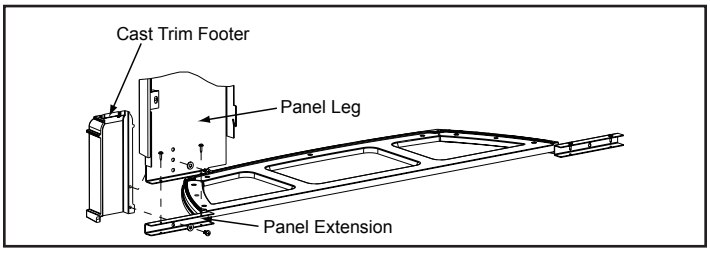

Figure 23.1

G. Surround & Trim Set

Included in Surround Kit: 2 side pieces, left and right, top piece and fastener package.

Included in Basic Trim Kit: 2 side pieces, left and right, top piece and "L" brackets.

Tools Needed: 4-6 inch long Phillip head screwdriver, pliers and flat head screwdriver

1. Lay surround face down on a flat protected surface to prevent scratching.
2. Using the Phillips head screwdriver attach the side surrounds to the top surround using 2 sheet metal screws provided with the kit on each side.
3. Assemble the trim with the two corner brackets provided.
4. Slide the assembled trim over the assembled surround set.
5. Remove the cast sides before attaching the surround and trim. Lift up the top to expose the thumb screws that secure the cast sides. Remove the thumb screw and top bracket and then remove the cast side. NOTE: The right cast side bracket has the hopper cut out switch attached. Remove the retainer from the right side and allow to hang down into the insert or disconnect the switch when removing side.
6. Install the power cord in the surround.
7. If power enters the appliance on the right side: Using the pliers, attach cord restraint 12 inches from the female end of the cord and then press into the right side panel. **Figure 23.2.**
8. If power enters appliance on the left side: The cord will have to be routed through the back of the insert. When routing the power cord, keep cord lying flat as possible, keeping the cord away from all exhaust surfaces and moving parts. After routing, install cord restraint and press into the left side panel.
9. Slide surround over the top of the insert into place. Surround attaches to bottom and top of insert sides with the supplies 1/4 inch screws.
10. Plug cord into inlet on junction box routing the wire.
11. Install plug into unused hole.

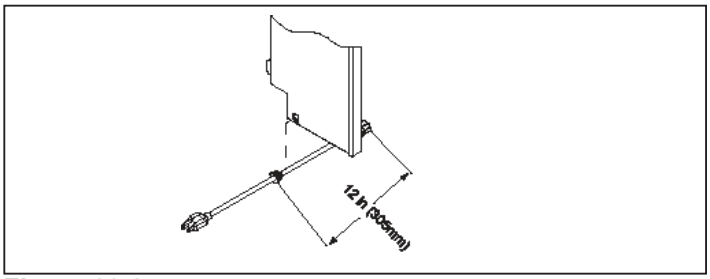

Figure 23.2

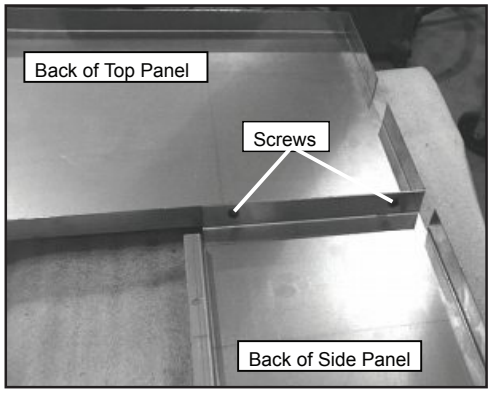

Figure 23.3

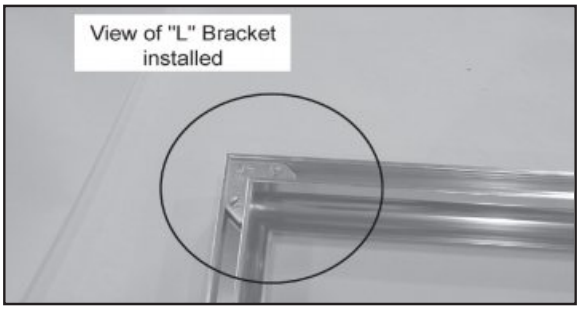

Figure 23.4

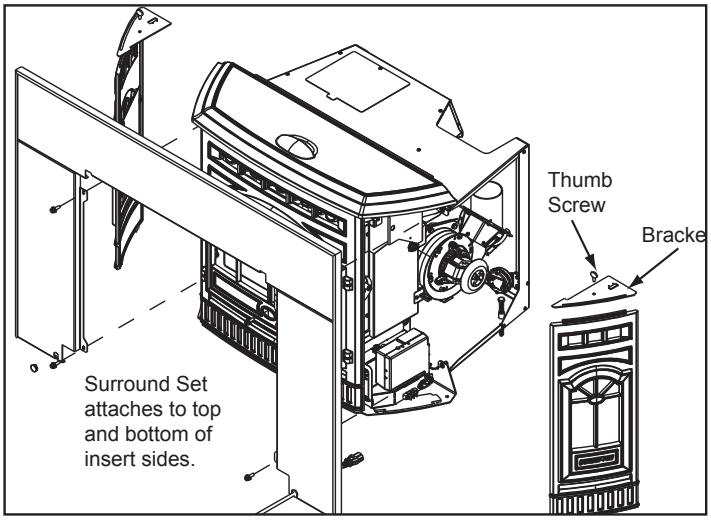

Figure 23.5

H. Surround and Cast Trim Set

Included in Surround Kit: (2) side surrounds, left and right; (1) surround top; (1) fastener package.

Included in Cast Trim Kit: (2) cast trim legs, left and right; (1) cast trim header; (2) cast trim footers, left and right

Tools Needed: 4-6 inch long Phillips head screwdriver, pliers and flat head screwdriver.

1. Place the peel and stick round felt vibration insulation pads on the front side in each corner of the top metal piece and on the back side in each corner of the top cast piece. **Figure 24.1**
2. Lay surround face down on a flat protected surface to prevent scratching.
3. Using the Phillips screwdriver attach the side surrounds to the top surround using 2 sheet metal screws provided with the kit on each side.
4. Assemble Cast Trim and attach to surround:

a) Place corresponding cast trim pieces (2 cast trim sides and 1 cast trim header) underneath the surround set, also face down. Align the holes in the metal pieces with the 5 bosses on the top cast piece and 2 bosses on each side piece. **Figure. 24.1**

b) Attach the magnets to the magnet brackets with one countersink screw each. Attach magnet and bracket to the metal surround sides with magnet facing the front as shown in **Figure. 24.1.**

c) Place cast footers under metal sides aligning the top and bottom holes.

d) The 9 mounting clips are shipped in one long strip. Use your hands or pliers to break them apart.

e) Each clip has a clearance notch to allow room for the cast on the boss. Place the clips over the boss so that the notch is facing the outer edge of the surround. **Figure 24.3**

f) It is best to install all of the 1/4-20 screws only half way at first to allow for adjustments. After adjustment tighten the 2 screws in each footer first and then work your way around to the rest.

5. Remove the cast sides before attaching the surround and trim. Lift up the top to expose the thumb screws that secure the cast sides. Remove the thumb screw and top bracket and then remove the cast side. NOTE: The right cast side bracket has the hopper cut out switch attached. Remove the retainer from the right side and allow to hang down into the insert or disconnect the switch when removing side.
6. Install the power cord in the surround.
7. If power enters the appliance on the right side: Using the pliers, attach cord restraint 12 inches from the female end of the cord and then press into the right side panel.
8. If power enters appliance on the left side: The cord will have to be routed through the back of the insert. When routing the power cord, keep cord lying flat as possible, keeping the cord away from all exhaust surfaces and moving parts. After routing, install cord restraint and press into the left side panel.
9. Slide surround over the top of the insert into place. Surround attaches to bottom and top of insert sides with the supplies 1/4 inch screws.
10. Plug cord into inlet on junction box routing the wire.
11. Install plug into unused hole.

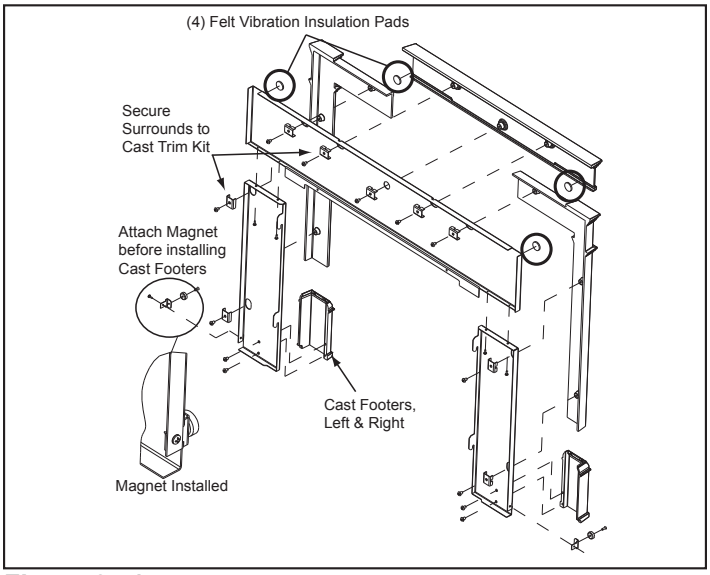

Figure 24.1

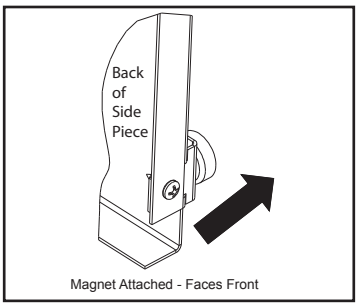

Figure 24.2

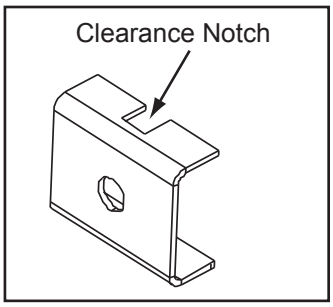

Figure 24.3

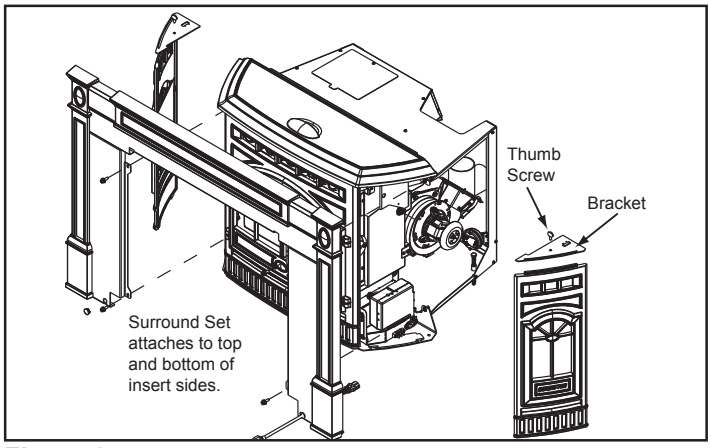

Figure 24.4

I. Optional Log Set Placement Instructions

Two Piece Log Set Installation

1. Open door to expose the firebox.
2. Install the left log first and then the right log. **Figure 25.1**
3. Lean the logs against the cast iron brick in the back of the firebox.
4. Push the logs to the far left and far right against the sides of the firebox. **Figure 25.2**
5. To clean the logs, use a vacuum cleaner and a soft brush attachment or a paint brush.

CAUTION

Logs are FRAGILE. Use extreme care when handling or cleaning logs.

Figure 25.1

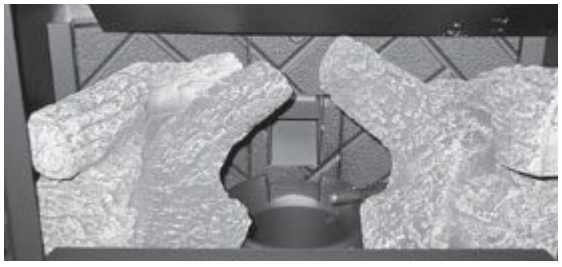

Figure 25.2

NOTE:
Due to the abrasive nature of a pellet appliance fire, the logs are not covered under warranty. Any placement variation other than shown here can cause excessive heat and shall void the appliance warranty.

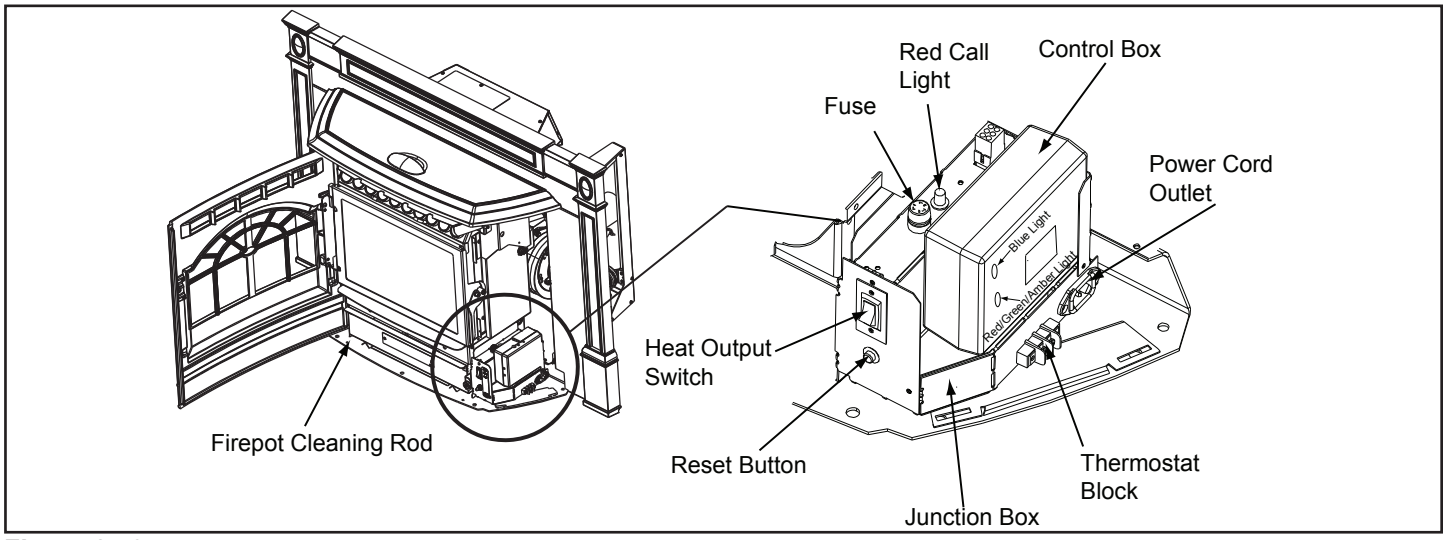

Figure 25.3

J. Thermostat Installation

The kit comes standard with a wall thermostat and 25' of wire. If you need to run more than 25' make sure you use a continuous strand of 18 to 22 gauge thermostat wire. For optimum performance your thermostat should be located on an inside wall approximately 5' up from the floor.

How to Install Your Wall Thermostat

1. Separate the body of the thermostat from the mounting plate by gently pulling the two pieces apart
2. Connect your thermostat wire to the W and R terminals (see **Figure 26.1**)
3. Screw the backer plate to the wall using the hardware included
4. Snap the thermostat to the backer plate
5. Connect the wires to the 2 center screws on the terminal block on the back of the product

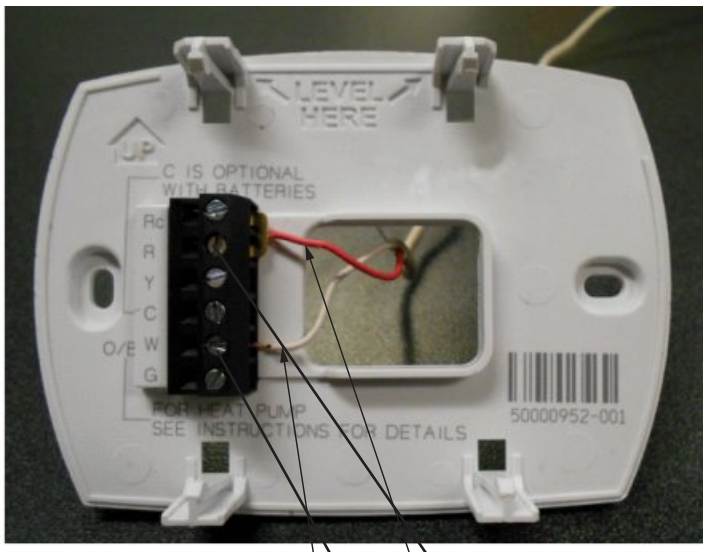

Figure 26.1

Battery Installation and Replacement

NOTE: 2 AAA batteries are included with the thermostat and must be installed before the appliance can be operated.

Install fresh batteries immediately when the **REPLACE BATTERY** warning begins flashing. The warning flashes about two months before the batteries are depleted. Even if the warning does not appear, you should replace batteries once a year (see **Figure 26.2**).
If batteries are inserted within two minutes, the time and day will not have to be reset. All other settings are permanently stored in memory.

⚠ CAUTION

Shock hazard.

- Do NOT remove grounding prong from plug.
- Plug directly into properly grounded 3 prong receptacle.
- Route cord away from appliance.
- Do NOT route cord under or in front of appliance.

Figure 26.2

Thermostat Operation

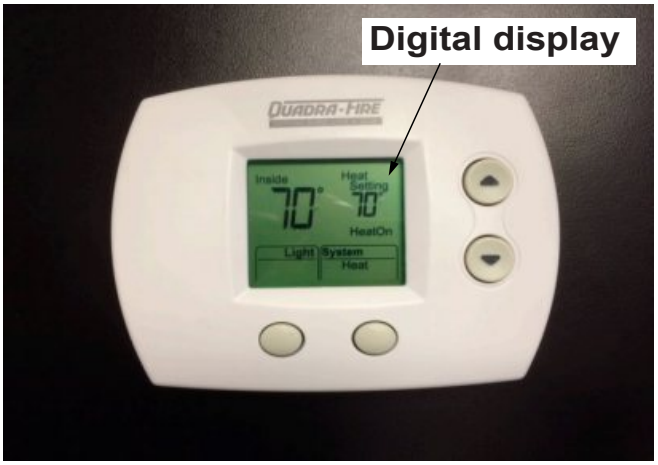

Back light	Heat (On) or Off button	Temperature buttons Press up or down to set preferred temperature.

7 Mobile Home Installation

You must use a Quadra-Fire Outside Air Kit for installation in a mobile home.

1. An outside air inlet must be provided for the combustion air and must remain clear of leaves, debris, ice and/or snow. It must be unrestricted while the appliance is in use to prevent room air starvation which causes smoke spillage. Smoke spillage can also set off smoke alarms.
2. The combustion air duct system must be made of metal. It must permit zero clearance to combustible construction and prevent material from dropping into the inlet or into the area beneath the dwelling and contain a rodent screen.
3. The appliance must be secured to the mobile home structure by bolting it to the floor (using lag bolts). Use the same holes that secured the appliance to the shipping pallet.
4. The appliance must be grounded with #8 solid copper grounding wire or equivalent, terminated at each end with an NEC approved grounding device.
5. Refer to Clearances to Combustibles and floor protection requirements on **page 7 & 8** for listings to combustibles and appropriate chimney systems.
6. Use silicone to create an effective vapor barrier at the location where the chimney or other component penetrates to the exterior of the structure.
7. Follow the chimney manufacturer's instructions when installing the vent system for use in a mobile home.
8. Installation shall be in accordance with the Manufacturers Home & Safety Standard (HUD) CFR 3280, Part 24.

CAUTION

Never draw outside combustion air from:
- Wall, floor or ceiling cavity
- Enclosed space such as an attic or garage

WARNING

It is critical to have a working smoke detector installed in the home of appliance operation.

- Smoke alarms that are properly installed and maintained play a vital role in reducing fire deaths and injuries. Having a working smoke alarm reduces the chance of fire related injuries..

CAUTION

THE STRUCTURAL INTEGRITY OF THE MOBILE HOME FLOOR, WALL AND CEILING/ROOF MUST BE MAINTAINED

Do NOT cut through:
- Floor joist, wall, studs or ceiling trusses.
- Any supporting material that would affect the structural integrity.

This appliance is to be connected to a factory-built chimney conforming to CAN/ULC-S629, Standard for 650°C Factory-Built Chimneys.
For removal of the chimney for mobile home transportation, contact the proper transportation officials.

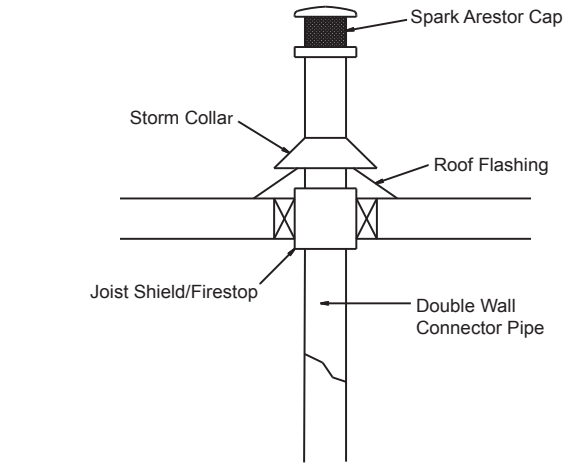

Figure 27.1

WARNING

Products of combustion generate carbon monoxide and different fuels generate different levels. Carbon monoxide
- Only use approved fuels in this appliance.
- Always keep door shut during operation. Operating this appliance with doors open can allow CO to leak into the home.

CO can kill you before you are aware it is in your home. At lower levels of exposure, CO causes mild effects that are often mistaken for the flu. These symptoms include headaches, dizziness, disorientation, nausea and fatigue. The effects of CO exposure can vary greatly from person to person depending on age, overall health and the concentration and length of exposure.

⚠ WARNING

NEVER INSTALL IN A SLEEPING ROOM.

8 Reference Materials

A. Service and Maintenance Log

Date of Service	Performed By	Description of Service

9 Accessory List

QUADRA-FIRE® Service Parts

Castile Insert-B

Beginning Manufacturing Date: Feb 2011
Ending Manufacturing Date: Active

IMPORTANT: THIS IS DATED INFORMATION. Parts must be ordered from a dealer or distributor. **Hearth and Home Technologies does not sell directly to consumers**. Provide model number and serial number when requesting service parts from your dealer or distributor.

ITEM	DESCRIPTION	COMMENTS	PART NUMBER	Stocked at Depot
	Adjustable Hearth Support - 12” x 50”, 2-10” H		ADJSPT-12	
	Damper, 3 Inch - Tall Vertical Installs Only		PEL-DAMP3	**Y**
	Damper, 4 Inch - Tall Vertical Installs Only		PEL-DAMP4	
	Log Set		LOGS-30-OE	
	Log Rear, Left		7050-144	
	Log Rear, Right		7050-143	
	Outside Air Kit, Rear		811-0872	
	Channel, Air Intake		SRV413-7040	
	Cover, Outside Air Kit, Floor		411-1071	
	Hose, Alum Flex, 2 Inch x 3 Ft	3 Ft	SRV200-0860	
	Outside Air Cap Assembly		7001-044	
	Outside Air Collar Assembly		SRV7001-045	
	Trim Plate, Outside Air Kit		412-7100	
	Pullrod Handle		PULLROD-HNDL	
	Surround Trim Assembly 43 X 31	Black	TRIMKIT-4331-BK	
		No Longer Available	TRIMKIT-4331-GD	
		Nickel	TRIMKIT-4331-NL	
	Surround Trim Assembly 51 X 34	Black	TRIMKIT-5134-BK	
		No Longer Available	TRIMKIT-5134-GD	
		Nickel	TRIMKIT-5134-NL	

Additional service part numbers appear on following page.

QUADRA-FIRE® Service Parts

Castile Insert-B

Beginning Manufacturing Date: Feb 2011
Ending Manufacturing Date: Active

IMPORTANT: THIS IS DATED INFORMATION. Parts must be ordered from a dealer or distributor. **Hearth and Home Technologies does not sell directly to consumers**. Provide model number and serial number when requesting service parts from your dealer or distributor.

ITEM	DESCRIPTION	COMMENTS	PART NUMBER	Stocked at Depot
	Surround, Basic, Large		SP-CSTLI5134	
	Component Pack		SRV7022-055	
	Surround, Basic, Standard		SP-CSTLI4331	
	Component Pack		SRV7022-055	
	Surround, Standard	Use With Cast Trim	SP-CSTLI4230-CM	
	Component Pack		SRV7022-054	
	Surround, Standard	Use With Cast Trim	SP-CSTLI4834-CM	
	Thermostat		WALL-STAT	**Y**
	Thermostat, Programmable		WALL-STAT-P	
	Trim Cast	Matte Black	811-0930	
	Footer, Left		414-7090MBK	
	Footer, Right		414-7100MBK	
	Header		414-7110MBK	
	Trim Leg, Left		414-7120MBK	
	Trim Leg, Right		414-7130MBK	
	Trim Cast	Mahogany	811-0960	
	Footer, Left		414-7090PMH	
	Footer, Right		414-7100PMH	
	Header		414-7110PMH	
	Trim Leg, Left		414-7120PMH	
	Trim Leg, Right		414-7130PMH	
	Trim Cast	Sienna Bronze	TR-CAST-CSB	
	Footer, Left		414-7090CSB	
	Footer, Right		414-7100CSB	
	Header		414-7110CSB	
	Trim Leg, Left		414-7120CSB	
	Trim Leg, Right		414-7130CSB	
	Trim Cast	Willow	TR-CAST-CWL	
	Footer, Left		414-7090CWL	
	Footer, Right		414-7100CWL	
	Header		414-7110CWL	
	Trim Leg, Left		414-7120CWL	
	Trim Leg, Right		414-7130CWL	
	Trim Support, adjustable (standard panel surround only)	**No Longer Available**	811-0980	
	Brackets for Trim installation		SRV7022-503G	

QUADRA-FIRE® Service Parts

Castile Insert-B

Beginning Manufacturing Date: Feb 2011
Ending Manufacturing Date: Active

IMPORTANT: THIS IS DATED INFORMATION. Parts must be ordered from a dealer or distributor. **Hearth and Home Technologies does not sell directly to consumers**. Provide model number and serial number when requesting service parts from your dealer or distributor.

ITEM	DESCRIPTION	COMMENTS	PART NUMBER	Stocked at Depot
	FASTENERS			
	Avk Rivnut Repair Kit		RIVNUT-REPAIR	**Y**
	Bolt, Hex Head, 1/4-20 X 1	Pkg of 10	25221A/10	**Y**
	Bumper, Rubber	Pkg of 12	SRV224-0340/12	**Y**
	Leveling Bolt	Pkg of 25	220-0080/25	**Y**
	Nut, Capped, Push, 1/4	Pkg of 24	7000-157/24	**Y**
	Nut, Ser Flange Small 1/4-20	Pkg of 24	226-0130/24	**Y**
	Nut, Wing, 8-32	Pkg of 24	226-0160/24	**Y**
	Screw Flat Head 1/4-20	Pkg of 24	7000-130/24	**Y**
	Screw, 1/4-20X3/8 Phillips Button Head	Pkg of 24	7000-401/24	**Y**
	Screw, Flat Head Philips 8-32X1/2	Pkg of 12	220-0490/12	**Y**
	Screw, Machine Screw 1/4-20X5/8	Pkg of 24	220-0440/24	**Y**
	Screw, Pan Head Philips 8-32 X 3/8	Pkg of 40	225-0500/40	**Y**
	Screw, Pan Head Philips Tc 8-32X1/2	Pkg of 25	220-0030/25	**Y**
	Screw, Pan Head Philips, 10/32 X 1/4	Pkg of 24	229-1230/24	**Y**
	Screw, Sheet Metal #8 X 1/2 S-Grip	Pkg of 40	12460/40	**Y**
	Speed Nut 5/16	Pkg of 24	7000-422/24	**Y**
	Thumb Screw, 1/4-20 X 1/2	Pkg of 10	7000-617/10	**Y**
	Washer, 1/4 Sae	Pkg of 24	28758/24	**Y**
	Wing Thumb Screw 8-32X1/2	Pkg of 24	7000-223/24	**Y**

QUADRA-FIRE®

NOTHING BURNS LIKE A QUAD

CONTACT INFORMATION

Hearth & Home Technologies
352 Mountain House Road
Halifax, PA 17032
Division of HNI INDUSTRIES

Please contact your Quadra-Fire dealer with any questions or concerns.
For the number of your nearest Quadra-Fire dealer
log onto www.quadrafire.com

CAUTION

DO NOT DISCARD THIS MANUAL

- Important operating and maintenance instructions included.
- Read, understand and follow these instructions for safe installation and operation.
- Leave this manual with party responsible for use and operation.

We recommend that you record the following pertinent information for your heating appliance.

Date purchased/installed:_____

Serial Number:_____ Location on appliance:_____

Dealership purchased from:_____Dealer phone:_1(_____)_____-_____

Notes:_____

_____

_____

_____

This product may be covered by one or more of the following patents: (United States) 5341794, 5263471, 6688302, 7216645, 7047962 or other U.S. and foreign patents pending.

HEARTH & HOME technologies