Installation Manual

Installation and Appliance Setup

INSTALLER: Leave this manual with party responsible for use and operation.
OWNER: Retain this manual for future reference.

***NOTICE: DO NOT** discard this manual!*

HEAT & GLO™

No one builds a better fire

Models:

SL-5F
SL-7F

GAS-FIRED
c UL us
LISTED

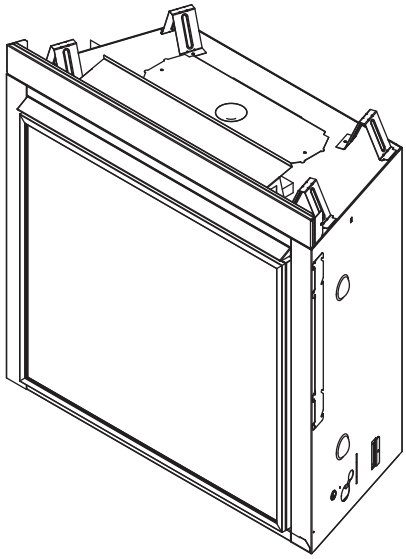

This appliance may be installed as an OEM installation in manufactured home (USA only) or mobile home and must be installed in accordance with the manufacturer's instructions and the *Manufactured Home Construction and Safety Standard, Title 24 CFR, Part 3280* in the United States, or the *Standard for Installation in Mobile Homes, CAN/CSA Z240 MH Series,* in Canada.

This appliance is only for use with the type(s) of gas indicated on the rating plate. This appliance is not convertible for use with other gases, unless a certified kit is used.

⚠ WARNING:
FIRE OR EXPLOSION HAZARD
Failure to follow safety warnings exactly could result in serious injury, death, or property damage.

- **DO NOT** store or use gasoline or other flammable vapors and liquids in the vicinity of this or any other appliance.
- **What to do if you smell gas**
  - **DO NOT** try to light any appliance.
  - **DO NOT** touch any electrical switch. **DO NOT** use any phone in your building.
  - Leave the building immediately.
  - Immediately call your gas supplier from a neighbor's phone. Follow the gas supplier's instructions.
  - If you cannot reach your gas supplier, call the fire department.
- Installation and service must be performed by a qualified installer, service agency, or the gas supplier.

⚠ DANGER

HOT GLASS WILL CAUSE BURNS.

DO NOT TOUCH GLASS UNTIL COOLED.

NEVER ALLOW CHILDREN TO TOUCH GLASS.

A barrier designed to reduce the risk of burns from the hot viewing glass is provided with this appliance and shall be installed for the protection of children and other at-risk individuals.

In the Commonwealth of Massachusetts installation must be performed by a licensed plumber or gas fitter.

See Table of Contents for location of additional Commonwealth of Massachusetts requirements.

⚠ Safety Alert Key:

- ***DANGER!*** *Indicates a hazardous situation which, if not avoided will result in death or serious injury.*
- ***WARNING!*** *Indicates a hazardous situation which, if not avoided could result in death or serious injury.*
- ***CAUTION!*** *Indicates a hazardous situation which, if not avoided, could result in minor or moderate injury.*
- ***NOTICE:*** *Used to address practices not related to personal injury.*

Table of Contents

Installation Standard Work Checklist 3

1 Product Specific and Important Safety Information

A. Appliance Certification 4
B. Glass Specifications 4
C. BTU Specifications 4
D. High Altitude Installations 4
E. Non-Combustible Materials Specification 4
F. Combustible Materials Specification 4
G. Electrical Codes 4
H. Requirements for the Commonwealth of Massachusetts . . 5

2 Getting Started

A. Design and Installation Considerations 6
B. Good Faith Wall Surface/TV Guidelines 6
C. Tools and Supplies Needed 7
D. Inspect Appliance and Components 7

3 Framing and Clearances

A. Appliance/Decorative Front Dimension Diagram 8
B. Clearances to Combustibles 10
C. Constructing the Appliance Chase 11
D. Floor Protection 11

4 Termination Location and Vent Information

A. Vent Termination Minimum Clearances 12
B. Chimney Diagram 13
C. Approved Pipe 14
D. Use of Elbows 15
E. Measuring Standards 16
F. Use of Flex Vent 17
G. Vent Diagrams 17

5 Vent Clearances and Framing

A. Pipe Clearances to Combustibles 31
B. Wall Penetration Framing/Firestops 31
C. Ceiling Firestop/Floor Penetration Framing 32
D. Install Attic Insulation Shield 32

6 Appliance Preparation

A. Vent Collar Preparation - Top or Rear 33
B. Securing and Leveling the Appliance 35

7 Venting and Chimneys

A. Assemble Vent Sections (DVP Pipe) 36
B. Assemble Vent Sections (SLP Pipe) 37
C. Assemble Slip Sections 37
D. Secure the Vent Sections 38
E. Disassemble Vent Sections 38
F. Vertical Termination Requirements 39
G. Horizontal Termination Requirements 40

8 Electrical Information

A. General Information 42
B. Wiring Requirements 42

9 Gas Information

A. Fuel Conversion 45
B. Gas Pressure 45
C. Gas Connection 45
D. High Altitude Installations 45
E. Air Shutter Setting 46

10 Finishing

A. Facing and Finishing 47
B. Mantel and Wall Projections 48
C. Install Decorative Front/Hood 49

11 Appliance Setup

A. Remove Fixed Glass Assembly 50
B. Remove the Shipping Materials 50
C. Clean the Appliance 50
D. Install the Log Assembly and Lava Rock . . . . . 51 ➔
E. Install Fixed Glass Assembly 58
F. Install Optional Trim Kits 58

12 Reference Materials

A. Vent Components Diagrams 59
B. Accessories 70

➔ = Contains updated information.

Installation Standard Work Checklist

ATTENTION INSTALLER:
Follow this Standard Work Checklist

This standard work checklist is to be used by the installer in conjunction with, not instead of, the instructions contained in this installation manual.

Customer: _____
Lot/Address: _____
_____
Model (circle one): **SL-5F** **SL-7F**

Date Installed: _____
Location of Fireplace: _____
Installer: _____
Dealer/Distributor Phone # _____
Serial #: _____

> ***WARNING! Risk of Fire or Explosion!*** *Failure to install appliance according to these instructions could lead to a fire or explosion.*

Appliance Install	**YES**	**IF NO, WHY?**
Verified that the chase is insulated and sealed. (Pg. 11)	☐	
Verified clearances to combustibles. (Section 3)	☐	
Fireplace is leveled and secured. (Pg. 35)	☐	
Venting/Chimney Section 7 (Pg 36-41)		
Venting configuration complies to vent diagrams.	☐	
Venting installed, locked and secured in place with proper clearance.	☐	
Firestops installed.	☐	
Attic insulation shield installed.	☐	
Exterior wall/Roof flashing installed and sealed.	☐	
Terminations installed and sealed.	☐	
Electrical Section 8 (Pg 42-44)		
120VAC unswitched power provided to the appliance.	☐	
Switch wires properly installed.	☐	
Gas Section 9 (Pg 45-46)		
Proper appliance for fuel type.	☐	
Was a conversion performed?	☐	
Leak check performed and inlet pressure verified.	☐	
Verified proper air shutter setting for installation type.	☐	
Finishing Section 10 (Pg 47-49)		
Combustible materials not installed in non-combustible areas.	☐	
Verified all clearances meet installation manual requirements.	☐	
Mantels and wall projections comply with installation manual requirements.	☐	
Appliance Setup Section 11 (Pg 50-58)		
All packaging and protective materials removed (inside & outside of appliance).	☐	
Refractories, logs, media and embers installed correctly.	☐	
Glass assembly installed and secured.	☐	
Accessories installed properly.	☐	
Mesh, doors, or decorative front properly installed.	☐	
Manual bag and all of its contents are removed from inside/under the appliance and given to party responsible for use and operation.	☐	
Started appliance and verified no gas leaks exist.	☐	

Hearth & Home Technologies recommends the following:
- Photographing the installation and copying this checklist for your file.
- That this checklist remain visible at all times on the appliance until the installation is complete.

Comments: Further description of the issues, who is responsible (Installer/ Builder/ Other Trades, etc) and corrective action needed _____

_____

_____

Comments Communicated to party responsible _____ by _____ on _____
(Builder / Gen. Contractor/) (Installer) (Date)

➔ = Contains updated information.

2499-982 10/16

1 Product Specific and Important Safety Information

A. Appliance Certification

MODELS: **SL-5F, SL-7F**
LABORATORY: **Underwriters Laboratories, Inc. (UL)**
TYPE: **Direct Vent Heater**
STANDARD: **ANSI Z21.88-2014/CSA 2.33-2014**

This product is listed to ANSI standards for "Vented Gas Fireplace Heaters" and applicable sections of "Gas Burning Heating Appliances for Manufactured Homes and Recreational Vehicles", and "Gas Fired Appliances for Use at High Altitudes".

NOTICE: *This installation must conform with local codes. In the absence of local codes you must comply with the National Fuel Gas Code, ANSI Z223.1-latest edition in the U.S.A. and the CAN/CGA B149 Installation Codes in Canada.*

NOT INTENDED FOR USE AS A PRIMARY HEAT SOURCE. This appliance is tested and approved as either supplemental room heat or as a decorative appliance. It should not be factored as primary heat in residential heating calculations.

B. Glass Specifications

Hearth & Home Technologies appliances manufactured with tempered glass may be installed in hazardous locations such as bathtub enclosures as defined by the Consumer Product Safety Commission (CPSC). The tempered glass has been tested and certified to the requirements of **ANSI Z97.1** and **CPSC 16 CFR 1202** (Safety Glazing Certification Council **SGCC# 1595** and **1597**. Architectural Testing, Inc. Reports **02-31919.01** and **02-31917.01**).

This statement is in compliance with **CPSC 16 CFR Section 1201.5** "Certification and labeling requirements" which refers to **15** U.S. Code **(USC) 2063** stating "…Such certificate shall accompany the product or shall otherwise be furnished to any distributor or retailer to whom the product is delivered."

Some local building codes require the use of tempered glass with permanent marking in such locations. Glass meeting this requirement is available from the factory. Please contact your dealer or distributor to order.

C. BTU Specifications

Models *(U.S. or Canada)*		Maximum Input BTU/h	Minimum Input BTU/h	Orifice Size (DMS)
SL-5F (NG)	*(0-2000 FT)*	17,500	12,000	45
SL-5F (LP)	*(0-2000 FT)*	17,000	13,500	1.25 mm
SL-7F (NG)	*(0-2000 FT)*	24,000	16,500	42
SL-7F (LP)	*(0-2000 FT)*	20,500	16,500	54

D. High Altitude Installations

NOTICE: *If the heating value of the gas has been reduced, these rules do not apply. Check with your local gas utility or authorities having jurisdiction.*

When installing above 2000 feet elevation:

- In the USA: Reduce input rate 4% for each 1000 feet above 2000 feet.
- In CANADA: Input ratings are certified without a reduction of input rate for elevations up to 4500 feet (1370 m)above sea level. Please consult provincial and/or local authorities having jurisdiction for installations at elevations above 4500 feet (1370 m).

Check with your local gas utility to determine proper orifice size.

E. Non-Combustible Materials Specification

Material which will not ignite and burn. Such materials are those consisting entirely of steel, iron, brick, tile, concrete, slate, glass or plasters, or any combination thereof.

Materials that are reported as passing **ASTM E 136, Standard Test Method for Behavior of Materials in a Vertical Tube Furnace at 750 ºC** shall be considered non-combustible materials.

F. Combustible Materials Specification

Materials made of or surfaced with wood, compressed paper, plant fibers, plastics, or other material that can ignite and burn, whether flame proofed or not, or plastered or unplastered shall be considered combustible materials.

G. Electrical Codes

NOTICE: *This appliance must be electrically wired and grounded in accordance with local codes or, in the absence of local codes, with* **National Electric Code ANSI/NFPA 70-latest edition** *or the* **Canadian Electric Code CSA C22.1.**

- A 110-120 VAC circuit for this product must be protected with ground-fault circuit-interrupter protection, in compliance with the applicable electrical codes, when it is installed in locations such as in bathrooms or near sinks.

Note: The following requirements reference various Massachusetts and national codes not contained in this document.

H. Requirements for the Commonwealth of Massachusetts

For all side wall horizontally vented gas fueled equipment installed in every dwelling, building or structure used in whole or in part for residential purposes, including those owned or operated by the Commonwealth and where the side wall exhaust vent termination is less than seven (7) feet above finished grade in the area of the venting, including but not limited to decks and porches, the following requirements shall be satisfied:

Installation of Carbon Monoxide Detectors

At the time of installation of the side wall horizontal vented gas fueled equipment, the installing plumber or gas fitter shall observe that a hard wired carbon monoxide detector with an alarm and battery back-up is installed on the floor level where the gas equipment is to be installed. In addition, the installing plumber or gas fitter shall observe that a battery operated or hard wired carbon monoxide detector with an alarm is installed on each additional level of the dwelling, building or structure served by the side wall horizontal vented gas fueled equipment. It shall be the responsibility of the property owner to secure the services of qualified licensed professionals for the installation of hard wired carbon monoxide detectors.

In the event that the side wall horizontally vented gas fueled equipment is installed in a crawl space or an attic, the hard wired carbon monoxide detector with alarm and battery back-up may be installed on the next adjacent floor level.
In the event that the requirements of this subdivision can not be met at the time of completion of installation, the owner shall have a period of thirty (30) days to comply with the above requirements; provided, however, that during said thirty (30) day period, a battery operated carbon monoxide detector with an alarm shall be installed.

Approved Carbon Monoxide Detectors

Each carbon monoxide detector as required in accordance with the above provisions shall comply with NFPA 720 and be ANSI/UL 2034 listed and IAS certified.

Signage

A metal or plastic identification plate shall be permanently mounted to the exterior of the building at a minimum height of eight (8) feet above grade directly in line with the exhaust vent terminal for the horizontally vented gas fueled heating appliance or equipment. The sign shall read, in print size no less than one-half (1/2) in. in size, **"GAS VENT DIRECTLY BELOW. KEEP CLEAR OF ALL OBSTRUCTIONS".**

Inspection

The state or local gas inspector of the side wall horizontally vented gas fueled equipment shall not approve the installation unless, upon inspection, the inspector observes carbon monoxide detectors and signage installed in accordance with the provisions of 248 CMR 5.08(2)(a)1 through 4.

Exemptions

The following equipment is exempt from 248 CMR 5.08(2)(a)1 through 4:

- The equipment listed in Chapter 10 entitled "Equipment Not Required To Be Vented" in the most current edition of NFPA 54 as adopted by the Board; and
- Product Approved side wall horizontally vented gas fueled equipment installed in a room or structure separate from the dwelling, building or structure used in whole or in part for residential purposes.

MANUFACTURER REQUIREMENTS

Gas Equipment Venting System Provided

When the manufacturer of Product Approved side wall horizontally vented gas equipment provides a venting system design or venting system components with the equipment, the instructions provided by the manufacturer for installation of the equipment and the venting system shall include:

- Detailed instructions for the installation of the venting system design or the venting system components; and
- A complete parts list for the venting system design or venting system.

Gas Equipment Venting System NOT Provided

When the manufacturer of a Product Approved side wall horizontally vented gas fueled equipment does not provide the parts for venting the flue gases, but identifies "special venting systems", the following requirements shall be satisfied by the manufacturer:

- The referenced "special venting system" instructions shall be included with the appliance or equipment installation instructions; and
- The "special venting systems" shall be Product Approved by the Board, and the instructions for that system shall include a parts list and detailed installation instructions.

A copy of all installation instructions for all Product Approved side wall horizontally vented gas fueled equipment, all venting instructions, all parts lists for venting instructions, and/or all venting design instructions shall remain with the appliance or equipment at the completion of the installation.

See Gas Connection section for additional Commonwealth of Massachusetts requirements.

2 Getting Started

A. Design and Installation Considerations

Heat & Glo direct vent gas appliances are designed to operate with all combustion air siphoned from outside of the building and all exhaust gases expelled to the outside. No additional outside air source is required.

Installation MUST comply with local, regional, state and national codes and regulations. Consult insurance carrier, local building inspector, fire officials or authorities having jurisdiction over restrictions, installation inspection and permits.

Before installing, determine the following:

- Where the appliance is to be installed.
- The vent system configuration to be used.
- Gas supply piping requirements.
- Electrical wiring requirements.
- Framing and finishing details.
- Whether optional accessories—devices such as a fan, wall switch, or remote control—are desired.

Installation and service of this appliance should be performed by qualified personnel. Hearth & Home Technologies recommends HHT Factory Trained or NFI certified professionals.

hearthED FACTORY TRAINING Fuel Your Fire

NFI NATIONAL FIREPLACE INSTITUTE A CERTIFICATION AGENCY

Improper installation, adjustment, alteration, service or maintenance can cause injury or property damage. For assistance or additional information, consult a qualified service technician, service agency or your dealer.

B. Good Faith Wall Surface/TV Guidelines

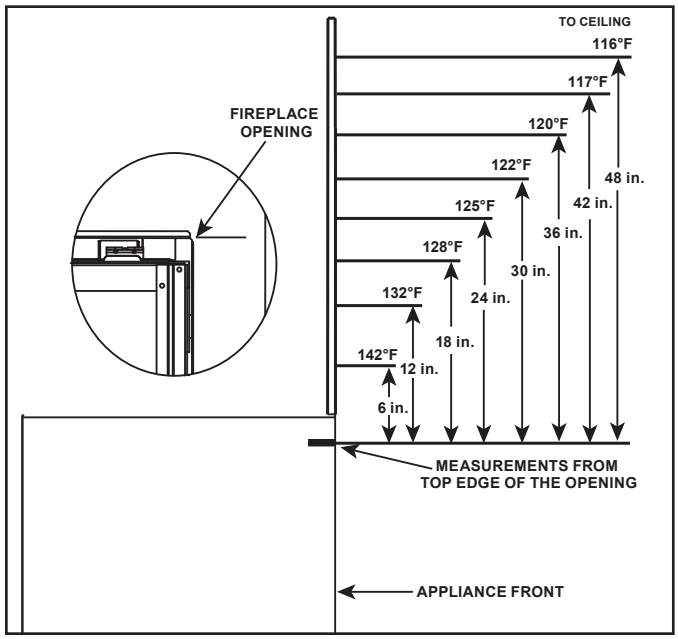

Figure 2.1 Good Faith Wall Surface Temperatures Above Appliance (SL-5F/SL-7F)

NOTICE: *Temperatures listed above are taken with a temperature measuring probe as prescribed by the test standard used for appliance certification. Temperatures on walls or mantels taken with an infrared thermometer may yield increased temperatures of up to 30 degrees or more depending on the thermometer settings and material characteristics being measured.*

C. Tools and Supplies Needed

Before beginning the installation be sure that the following tools and building supplies are available.

Tape measure	Framing material
Pliers	Hammer
Phillips screwdriver	Manometer
Gloves	Framing square
Voltmeter	Electric drill and bits (1/4 in.)
Plumb line	Safety glasses
Level	Reciprocating saw

Flat blade screwdriver

Non-corrosive leak check solution

1/2 - 3/4 in. length, #6 or #8 Self-drilling screws

Caulking material (300ºF minimum continuous exposure rating)

One 1/4 in. female connection (for optional fan).

D. Inspect Appliance and Components

- Carefully remove the appliance and components from the packaging.
- The vent system components and decorative doors and fronts may be shipped in separate packages.
- If packaged separately, the log set and appliance grate must be installed.
- Report to your dealer any parts damaged in shipment, particularly the condition of the glass.
- **Read all of the instructions before starting the installation. Follow these instructions carefully during the installation to ensure maximum safety and benefit.**

WARNING! Risk of Fire or Explosion! *Damaged parts could impair safe operation.* ***DO NOT i****nstall damaged, incomplete or substitute components. Keep appliance dry.*

Hearth & Home Technologies disclaims any responsibility for, and the warranty will be voided by, the following actions:

- Installation and use of any damaged appliance or vent system component.
- Modification of the appliance or vent system.
- Installation other than as instructed by Hearth & Home Technologies.
- Improper positioning of the gas logs or the glass door.
- Installation and/or use of any component part not approved by Hearth & Home Technologies.

Any such action may cause a fire hazard.

WARNING! Risk of Fire, Explosion or Electric Shock! ***DO NOT*** *use this appliance if any part has been under water. Call a qualified service technician to inspect the appliance and to replace any part of the control system and/or gas control which has been under water.*

3 Framing and Clearances

A. Appliance/Decorative Front Dimension Diagram

Dimensions are actual appliance dimensions. Use for reference only. For framing dimensions and clearances refer to Section 5.

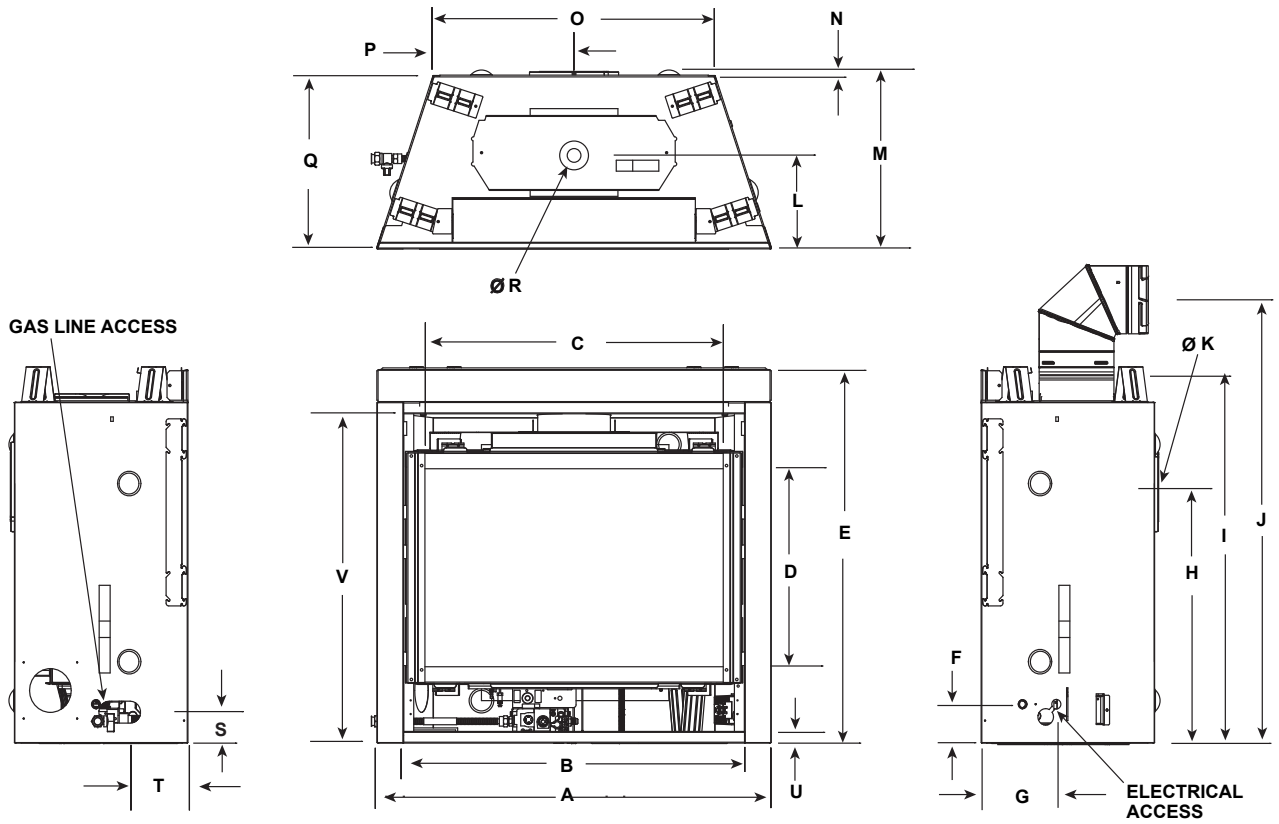

	SL-5F		SL-7F	
Location	Inches	Millimeters	Inches	Millimeters
A	36	914	41	1041
B	31-1/8	791	36-1/8	918
C	27-3/16	691	32-1/16	814
D	18-1/16	459	21-1/2	546
E	34-1/16	865	37-5/8	956
F	3-9/16	90	3-9/16	90
G	6-7/8	175	6-7/8	175
H	23-3/8	594	26-7/8	683
I	34-3/8	873	37-7/8	962
J	35-1/2	902	39-15/16	1014
K	8	203	8	203
L	8-13/16	224	8-13/16	224
M	16-5/16	414	16-5/16	414
N	1/2	13	1/2	13
O	25-3/4	654	30-3/4	781
P	12-7/8	327	15-3/8	391
Q	15-7/8	403	15-7/8	403
R	6-5/8	168	6-5/8	168
S	2-3/16	56	2-3/16	56
T	6	152	6	152
U	1	25	1	25
V	30-1/16	764	33-9/16	853

Figure 3.1 Appliance Dimensions

FIRESCREEN DECORATIVE FRONTS (Factory-Supplied)

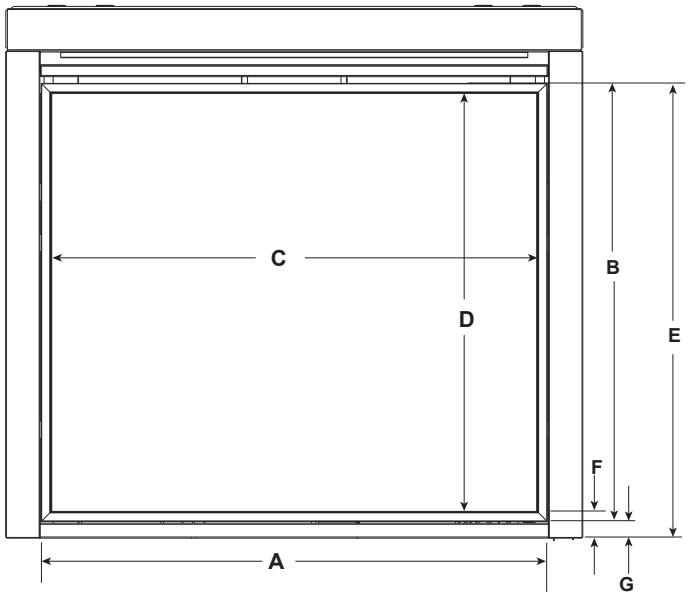

		A	B	C	D	E	F	G
SL-5F	in.	30-5/16	27-1/4	29-1/2	25-7/8	28-3/4	2-3/16	1-1/2
	mm	770	692	749	657	730	56	38
SL-7F	in.	35-13/16	31-1/8	34-3/8	29-5/8	32-1/2	2-1/8	1-5/16
	mm	910	791	873	752	826	54	33

CLEAN FACE DECORATIVE FRONTS

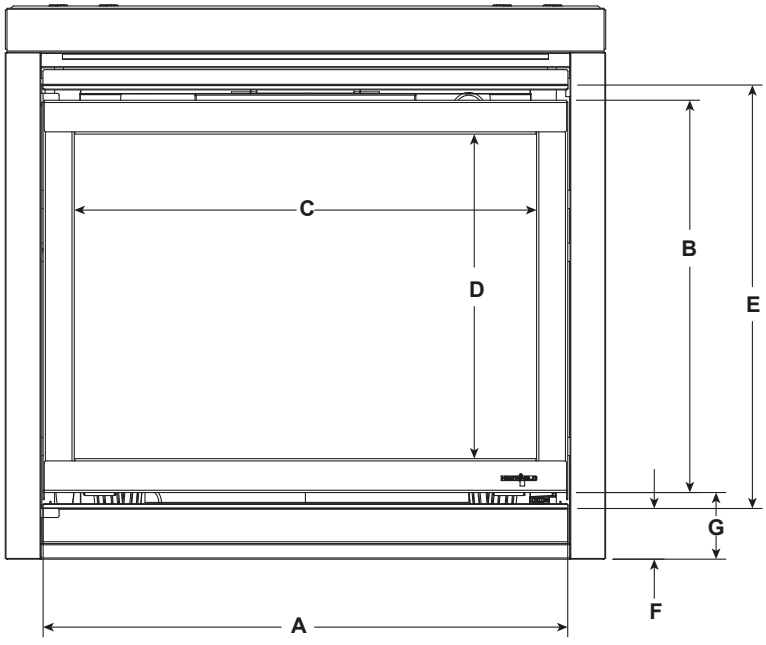

		A	B	C	D	E	F	G
SL-5F	in.	30-13/16	23-5/16	26-9/16	18-11/16	25-7/16	3-1/2	4-9/16
	mm	783	592	675	475	646	89	116
SL-7F	in.	35-13/16	26-13/16	31-1/2	22-3/16	28-15/16	3-1/2	4-9/16
	mm	910	681	800	564	735	89	116

Figure 3.2 Appliance Dimensions - Firescreen and Clean Face Decorative Fronts

B. Clearances to Combustibles

When selecting a location for the appliance it is important to consider the required clearances to walls (see Figure 3.3).

WARNING! Risk of Fire or Burns! *Provide adequate clearance around air openings and for service access. Due to high temperatures, the appliance should be located out of traffic and away from furniture and draperies.*

NOTICE: *Illustrations reflect typical installations and are FOR DESIGN PURPOSES ONLY. Illustrations/diagrams are not drawn to scale. Actual installation may vary due to individual design preference.*

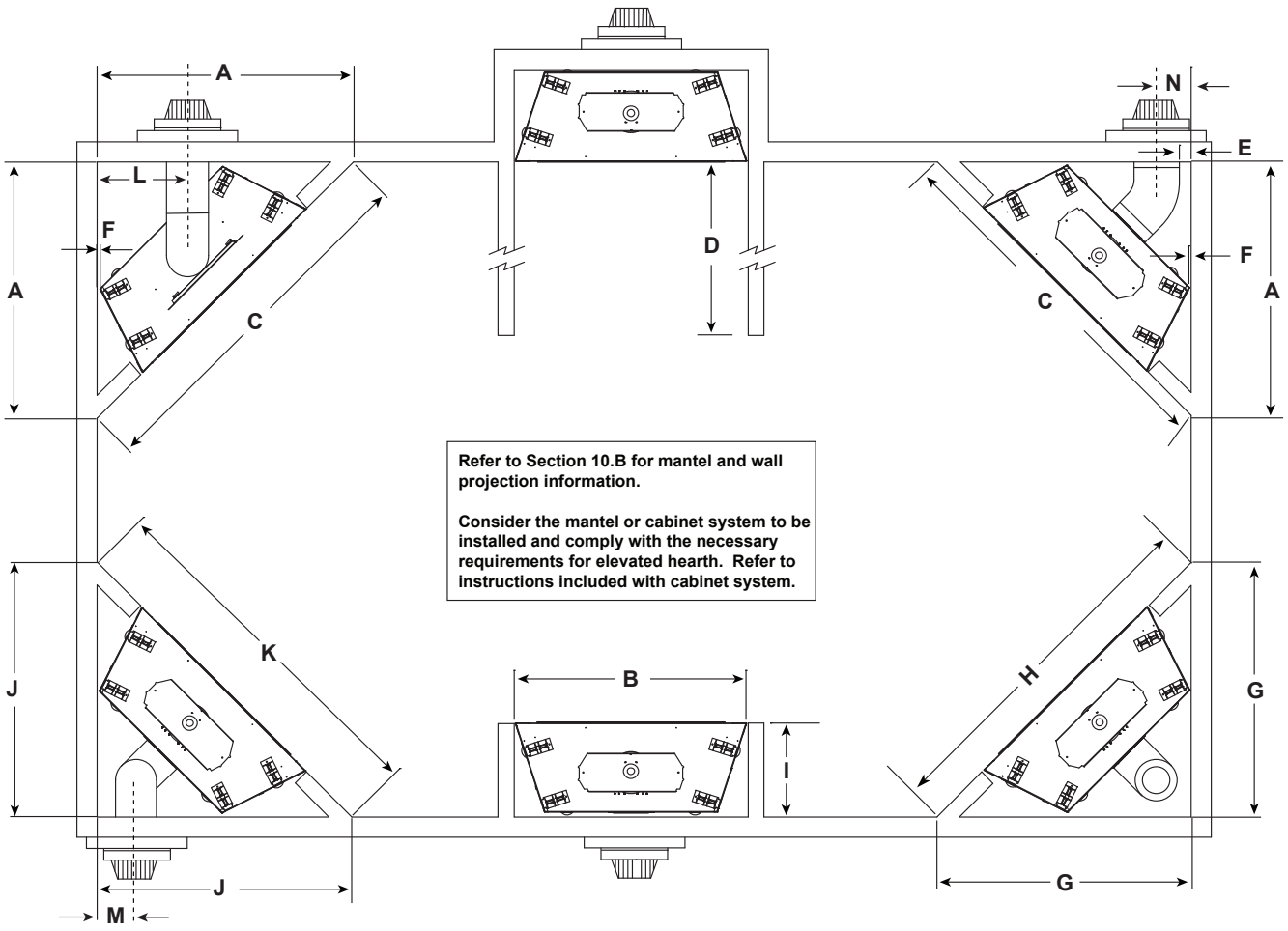

Models		A	B	C	D	E Min.	F Min.	G	H	I	J	K	L	M	N
SL-5F	in.	42	37	59-1/2	See Section 10.B for Alcove Installation	1	1/2	44	62-1/4	16-1/4	48-1/2	68-3/4	15-1/16	7-1/2	7-1/8
	mm	1067	940	1511		25	13	1118	1581	413	1232	1746	383	191	181
SL-7F	in.	45-1/2	42	64-3/8		1	1/2	45-1/2	64-3/8	16-1/4	48-1/2	68-3/4	16-5/8	7-1/2	9
	mm	1156	1067	1635		25	13	1156	1635	413	1232	1746	422	191	229

Figure 3.3 Appliance Locations

C. Constructing the Appliance Chase

A chase is a vertical box-like structure built to enclose the gas appliance and/or its vent system. In cooler climates the vent should be enclosed inside the chase.

NOTICE: *Treatment of ceiling firestops and wall shield firestops and construction of the chase may vary with the type of building. These instructions are not substitutes for the requirements of local building codes. Therefore, you MUST check local building codes to determine the requirements to these steps.*

Chases should be constructed in the manner of all outside walls of the home to prevent cold air drafting problems. The chase should not break the outside building envelope in any manner.

Walls, ceiling, base plate and cantilever floor of the chase should be insulated. Vapor and air infiltration barriers should be installed in the chase as per regional codes for the rest of the home. Additionally, in regions where cold air infiltration may be an issue, the inside surfaces may be sheetrocked and taped (or an equivalent method may be used) to achieve maximum air tightness.

To further prevent drafts, the wall shield and ceiling firestops should be caulked with caulk with a minimum of 300ºF continuous exposure rating to seal gaps. Gas line holes and other openings should be caulked with caulk with a minimum of 300ºF continuous exposure rating or stuffed with unfaced insulation. If the appliance is being installed on a cement surface, a layer of plywood may be placed underneath to prevent conducting cold up into the room.

WARNING! Risk of Fire! *Maintain specified air space clearances to appliance and vent pipe:*

- Insulation and other materials must be secured to prevent accidental contact.
- The chase must be properly blocked to prevent blown insulation or other combustibles from entering and making contact with fireplace or chimney.
- Failure to maintain airspace may cause overheating and a fire.

D. Floor Protection

NOTICE: *Install appliance on hard metal or wood surfaces extending full width and depth.* ***DO NOT*** *install directly on carpeting, vinyl, tile or any combustible material other than wood.*

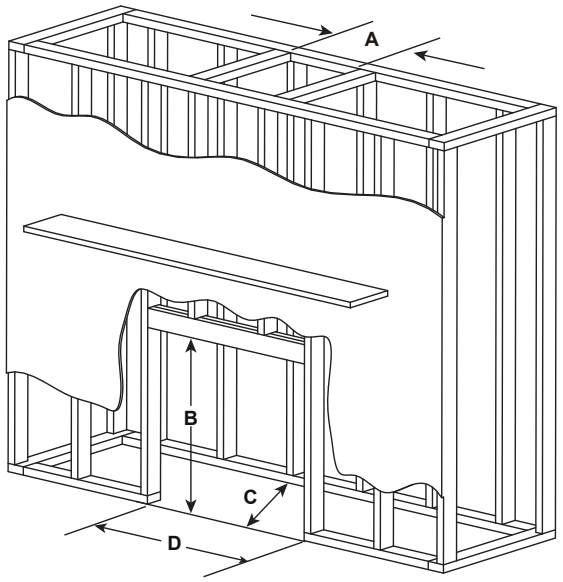

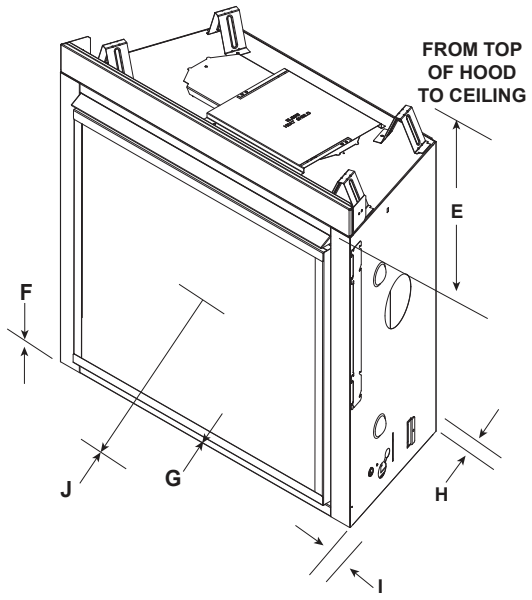

MINIMUM FRAMING DIMENSIONS*

Models		A		B	C		D	E	F	G	H	I	J
		DVP Pipe	SLP Pipe	Rough Opening (Height)	**DVP Pipe	SLP Pipe	Rough Opening (Width)	Clearance to Ceiling	Combustible Floor	Combustible Flooring	Behind Appliance	Sides of Appliance	Front of Appliance
		Rough Opening (Width)	Rough Opening (Width)		Rough Opening (Depth)	Rough Opening (Depth)							
SL-5F	in.	10	8-5/8	34-3/4	16-1/4	16-1/4	37	32	0	0	1/2	1/2	36
	mm	254	219	883	413	413	940	813	0	0	13	13	914
SL-7F	in.	10	8-5/8	38-1/4	16-1/4	16-1/4	42	32	0	0	1/2	1/2	36
	mm	254	219	972	413	413	1067	813	0	0	13	13	914

* Adjust framing dimensions for interior sheathing (such as sheetrock)
C** Add 12 inches for rear venting with one 90º elbow.

Figure 3.4 Clearances to Combustibles

4 Termination Location and Vent Information

A. Vent Termination Minimum Clearances

⚠ WARNING

Fire Risk.

Maintain vent clearance to combustibles as specified.

- **DO NOT** pack air space with insulation or other materials.

Failure to keep insulation or other materials away from vent pipe could cause overheating and fire.

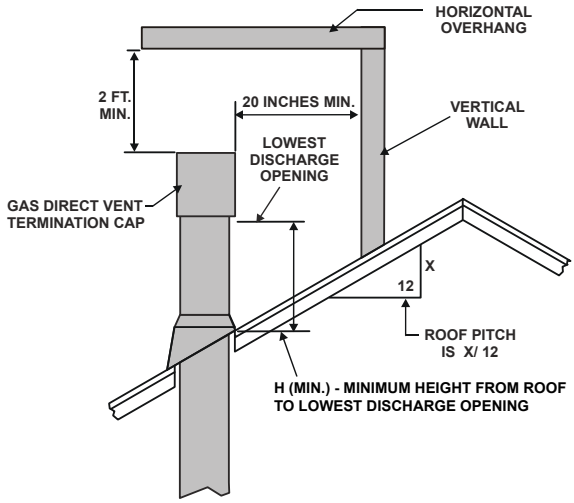

Roof Pitch	H (Min.) Ft.
Flat to 6/12	1.0*
Over 6/12 to 7/12	1.25*
Over 7/12 to 8/12	1.5*
Over 8/12 to 9/12	2.0*
Over 9/12 to 10/12	2.5*
Over 10/12 to 11/12	3.25
Over 11/12 to 12/12	4.0
Over 12/12 to 14/12	5.0
Over 14/12 to 16/12	6.0
Over 16/12 to 18/12	7.0
Over 18/12 to 20/12	7.5
Over 20/12 to 21/12	8.0

* H minimum may vary depending on regional snowfall. Refer to local codes.

Figure 4.1 Minimum Height From Roof To Lowest Discharge Opening

A	B
6 in. (minimum) up to 20 in. *152 mm/508 mm*	18 in. minimum *457 mm*
20 in. and over	0 in. minimum

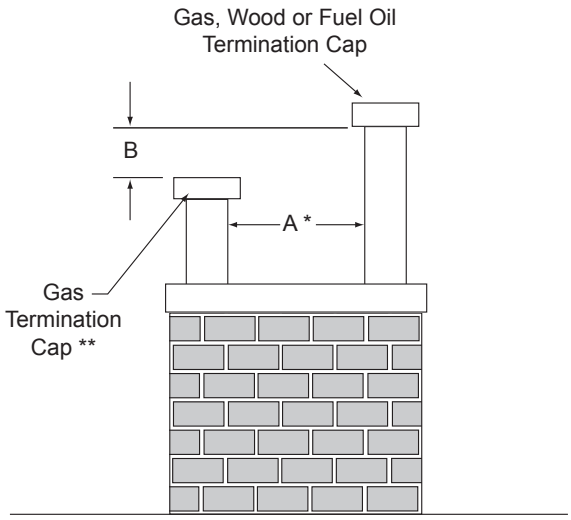

* If using decorative cap cover(s), this distance may need to be increased. Refer to the installation instructions supplied with the decorative cap cover.

** In a staggered installation with both gas and wood or fuel oil terminations, the wood or fuel oil termination cap must be higher than the gas termination cap.

Figure 4.2 Staggered Termination Caps

B. Chimney Diagram

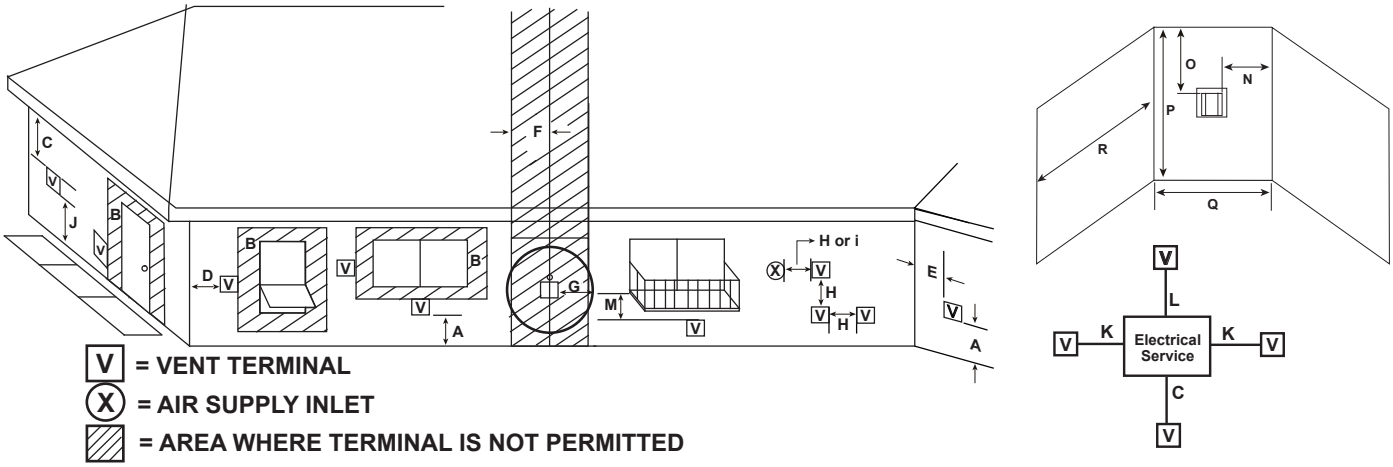

V = VENT TERMINAL

X = AIR SUPPLY INLET

= AREA WHERE TERMINAL IS NOT PERMITTED

A = 12 inches.....clearances above grade, veranda, porch, deck or balcony

B = 9 inches.....clearance to window or door that may be opened, or to permanently closed window

C = 18 inches.....clearance below unventilated soffit

18 inches.....clearance below ventilated soffit

30 inches.....clearance below vinyl soffits and electrical service

D = 6 inches.....clearance to outside corner

E = 6 inches.....clearance to inside corner

F = 3 ft. (Canada).....not to be installed above a gas meter/regulator assembly within 3 feet horizontally from the center-line of the regulator

G = 3 ft.....clearance to gas service regulator vent outlet

H = 12 inches.....clearance to non-mechanical (unpowered) air supply inlet, combustion air inlet or direct-vent termination

i = 3 ft. (U.S.A.)
6 ft. (Canada).....clearance to a mechanical (powered) air supply inlet

All mechanical air intakes within 10 feet of a termination cap must be a minimum of 3 feet below termination.

J = 7 ft. ..... On **public** property: clearance above paved sidewalk or a paved driveway.

A vent shall not terminate directly above a sidewalk or paved driveway which is located between two single family dwellings and serves both dwellings.

K = 6 inches.....clearance from sides of electrical service

L = 12 inches.....clearance above electrical service

Location of the vent termination must not interfere with access to the electrical service.

M = 18 inches ..... clearance under veranda, porch, deck, balcony or overhang

42 inches .....vinyl or composite overhang
Permitted when veranda, porch, deck or balcony is fully open on a minimum of 2 sides beneath the floor.

Figure 4.3 Minimum Clearances for Termination

Covered Alcove Applications

(Spaces open only on one side and with an overhang)

N = 6 inches ..... non-vinyl sidewalls

12 inches ..... vinyl sidewalls

O = 18 inches ..... non-vinyl soffit and overhang

42 inches ..... vinyl soffit and overhang

P = 8 ft.

	Q_{MIN}	R_{MAX}
1 cap	3 feet	2 x Q_{ACTUAL}
2 caps	6 feet	1 x Q_{ACTUAL}
3 caps	9 feet	2/3 x Q_{ACTUAL}
4 caps	12 feet	1/2 x Q_{ACTUAL}
Q_{MIN} = # termination caps x 3		R_{MAX} = (2 / # termination caps) x Q_{ACTUAL}

Measure vertical clearances from this surface.

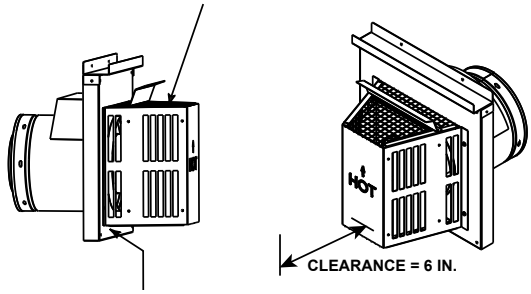

Measure horizontal clearances from this surface.

CAUTION! Risk of Burns! *Termination caps are HOT, consider proximity to doors, traffic areas or where people may pass or gather (sidewalk, deck, patio, etc.). Listed cap shields available. Contact your dealer.*

- Local codes or regulations may require different clearances.
- Vent system termination is **NOT** permitted in screened porches.
- Vent system termination is permitted in porch areas with two or more sides open.
- Hearth & Home Technologies assumes no responsibility for the improper performance of the appliance when the venting system does not meet these requirements.
- Vinyl protection kits are suggested for use with vinyl siding.

C. Approved Pipe

This appliance is approved for use with Hearth & Home Technologies DVP or SLP venting systems. Refer to Section 12.A for vent component information and dimensions.

DO NOT mix pipe, fittings or joining methods from different manufacturers.

The pipe is tested to be run inside an enclosed wall. There is no requirement for inspection openings at each joint within the wall.

WARNING! Risk of Fire or Asphyxiation. *This appliance requires a separate vent.* ***DO NOT*** *vent to a pipe serving a separate solid fuel burning appliance.*

D. Use of Elbows

Diagonal runs have both vertical and horizontal vent aspects when calculating the effects. Use the rise for the vertical aspect and the run for the horizontal aspect. See Figure 4.4.

Two 45º elbows may be used in place of one 90º elbow. On 45º runs, one foot of diagonal is equal to 8-1/2 in. (216 mm) horizontal run and 8-1/2 in. (216 mm) vertical run. A length of straight pipe is allowed between two 45º elbows. See Figure 4.4.

Figure 4.5 shows the vertical and horizontal offsets for DVP or SLP elbows.

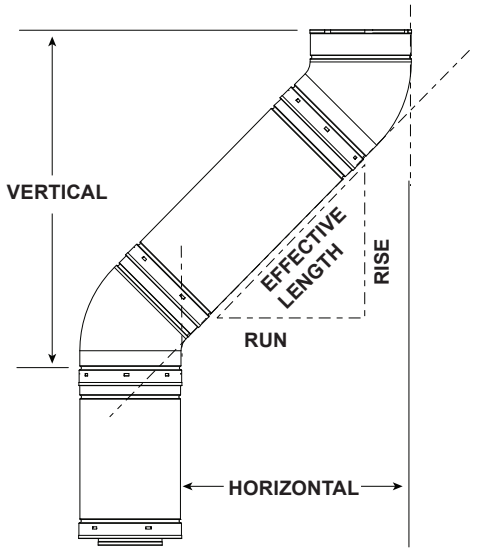

SLP Pipe	Effective Length		Rise/Run	
	Inches	Millimeters	Inches	Millimeters
SLP4	4	102	2-3/4	70
SLP6	6	152	4-1/4	108
SLP12	12	305	8-1/2	216
SLP24	24	610	17	432
SLP36	36	914	25-1/2	648
SLP48	48	1219	34	864
SLP6A	3 to 6	76 to 152	2-1/8-4-1/4	54-108
SLP12A	3 to 12	76 to 305	2-1/8-8-1/2	54-216

DVP Pipe	Effective Length		Rise/Run	
	Inches	Millimeters	Inches	Millimeters
DVP4	4	102	2-3/4	70
DVP6	6	152	4-1/4	108
DVP12	12	305	8-1/2	216
DVP24	24	610	17	432
DVP36	36	914	25-1/2	648
DVP48	48	1219	34	864
DVP6A	3 to 6	76 to 152	2-1/8-4-1/4	54-108
DVP12A	3 to 12	76 to 305	2-1/8-8-1/2	54-216

Figure 4.4

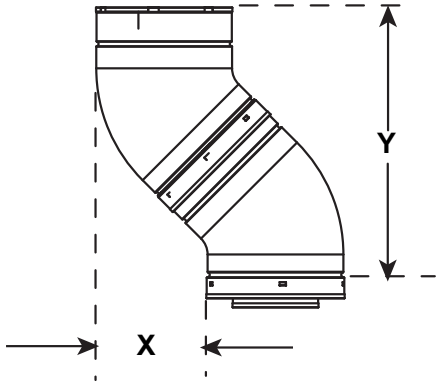

Vent Type	X		Y	
	Inches	Millimeters	Inches	Millimeters
DVP	4-1/2	114	17	432
SLP	5	127	11-3/4	298

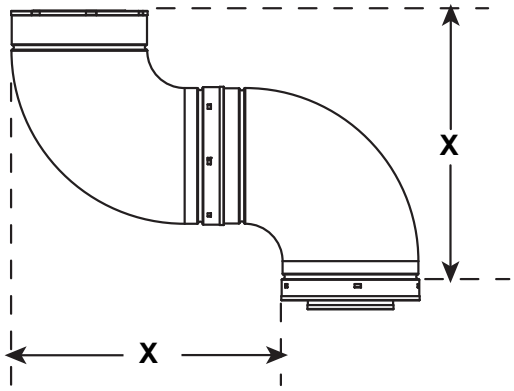

Vent Type	X	
	Inches	Millimeters
DVP	16-1/4	413
SLP	11-1/4	286

Figure 4.5 Vertical and Horizontal Offset for DVP and SLP Elbows

E. Measuring Standards

Vertical and horizontal measurements listed in the vent diagrams were made using the following standards:

- Pipe measurements are shown using the effective length of pipe. See Section 12.A (Figure 12.1 for DVP, Figure 12.6 for SLP) for information on effective length of pipe components.
- Horizontal terminations are measured to the outside mounting surface (flange of termination cap) (see Figure 4.8).
- Vertical terminations are measured to top of last section of pipe. See Figure 4.7.
- Horizontal pipe installed level with no rise.

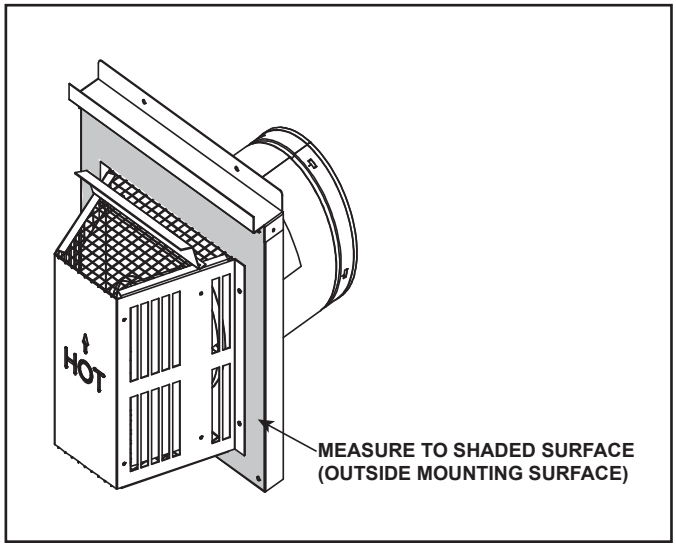

Figure 4.6 Measure to Outside Mounting Surface

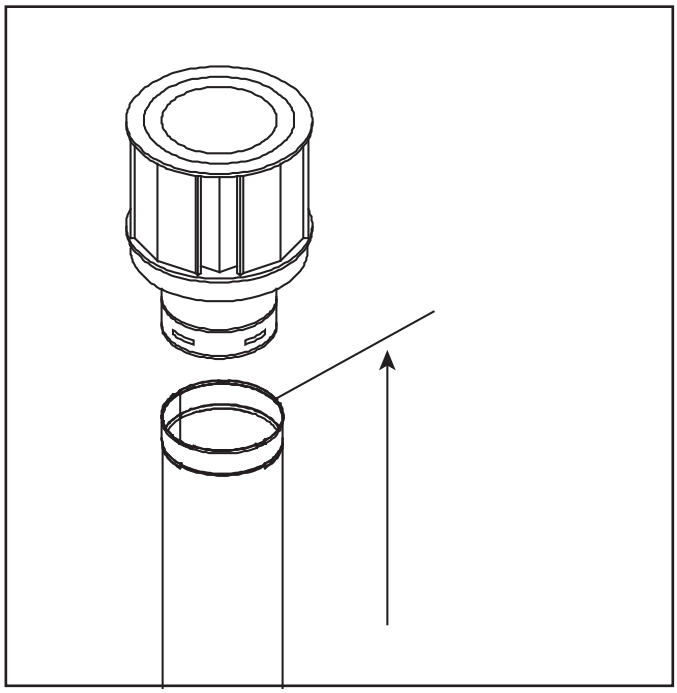

Figure 4.7. Measure to Top of Last Section of Pipe

F. Use of Flex Vent

The flex vent must be supported with the spacing between support intervals not exceeding 4 feet, with no more than ½ inch sag between supports.

A support is required at each change in venting direction, and in any location where it is necessary to maintain the necessary clearance to combustibles. A simple “up and out” installation (Figure 4.8) requires only enough support to maintain the necessary clearance to combustibles. However, the vent attachment point and the firestop location are considered to be supports.

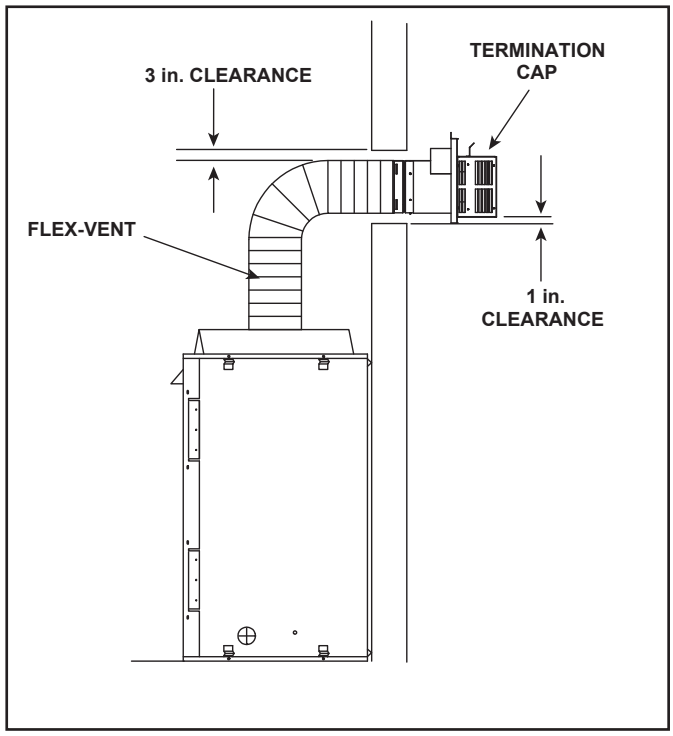

Figure 4.8

G. Vent Diagrams

To replace the first 90º starter elbow with two 45º elbows, refer to Figure 4.7. All other 90º elbows can be replaced with two 45º elbows.

General Rules:

- SUBTRACT 3 ft. from the total H measurement for each 90º elbow installed horizontally.
- SUBTRACT 1-1/2 ft. from the total H measurement for each 45º elbow installed horizontally.
- Elbows may be placed back to back anywhere in the system as long as the first 90º elbow is a starter elbow except as shown in Figure 4.9.
- When penetrating a combustible wall, a wall shield firestop must be installed.
- When penetrating a combustible ceiling, a ceiling firestop must be installed.
- Horizontal runs of vent do not require vertical rise; horizontal runs may be level.
- Horizontal termination cap should have a 1/4 inch downward slant to allow any moisture in cap to be released. See Figure 4.9.

Top Vent—Horizontal Termination—Two 45º Elbows

Installation requirements to replace the first 90º elbow with two 45º elbows:

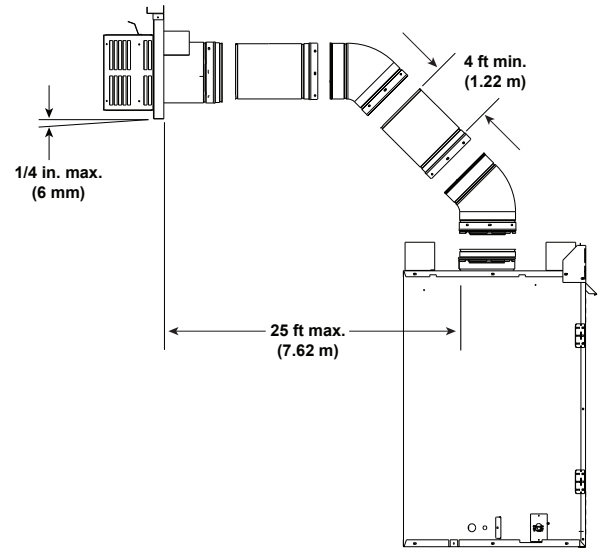

Figure 4.9

Top Vent - Horizontal Termination

One Elbow

Note: Use SLP Series components only.

V_1 Minimum**		H_1 Maximum	
90 Elbow Only**		2 ft.	610 mm
1/2 ft.**	152 mm	2 ft.	610 mm
1-1/2 ft.**	457 mm	3 ft.	914 mm
2-1/2 ft.**	762 mm	5 ft.	1.5 m
3-1/2 ft.	1.1 m	7 ft.	2.1 m
4-1/2 ft.	1.4 m	15 ft.	4.6 m
H_1 MAX. =15 ft. (4.6 m) V_1 + H_1 MAX. = 40 ft. (12.2 m) ** See Warning.			

⚠ WARNING**

Fire Risk.

- When using SLP-HRC-SS termination cap on top vented fireplaces, a one foot minimum vertical vent section is required before installing first elbow.
- When using DVP-TB1 termination cap on top vented fireplaces, a three foot minimum vertical vent section is required before installing first elbow.

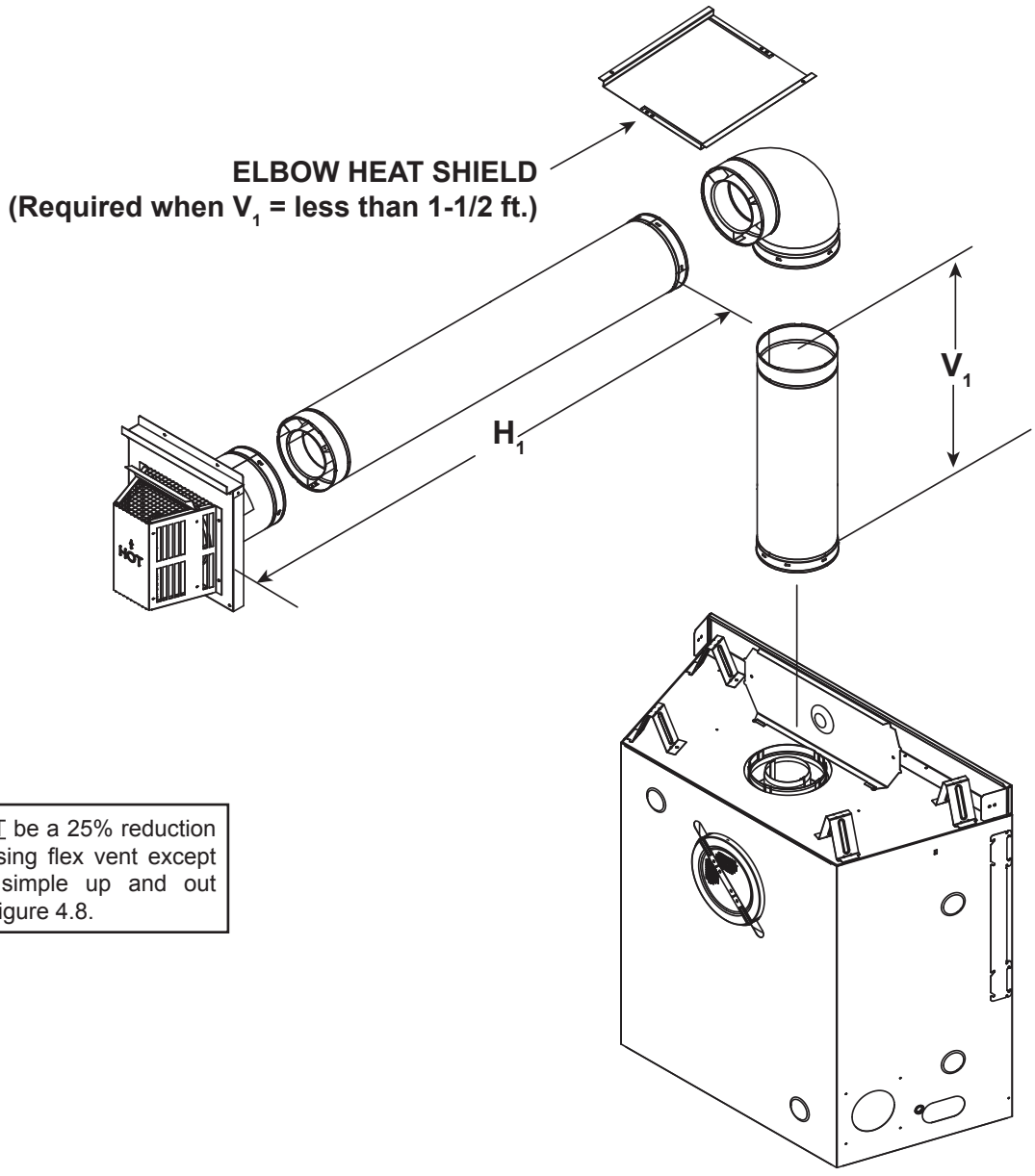

Note: There MUST be a 25% reduction in total H when using flex vent except when using the simple up and out installation. See Figure 4.8.

Figure 4.10

Two Elbows

Note: Use SLP Series components only.

Note: There MUST be a 25% reduction in total H when using flex vent except when using the simple up and out installation. See Figure 4.8.

V_1 Minimum**		$H_1 + H_2$ Maximum	
90 Elbow Only**		1/2 ft.	152 mm
1/2 ft.**	152 mm	1 ft.	305 mm
1-1/2 ft.**	457 mm	2 ft.	610 mm
2-1/2 ft.**	762 mm	4 ft.	1.2 m
3-1/2 ft.	1.1 m	6 ft.	1.8 m
4-1/2 ft.	1.4 m	14 ft.	4.3 m
$H_1 + H_2$ MAX. =14 ft. (4.3 m) $V_1 + H_1 + H_2$ MAX. = 40 ft. (12.2 m) **See Warning Below.			

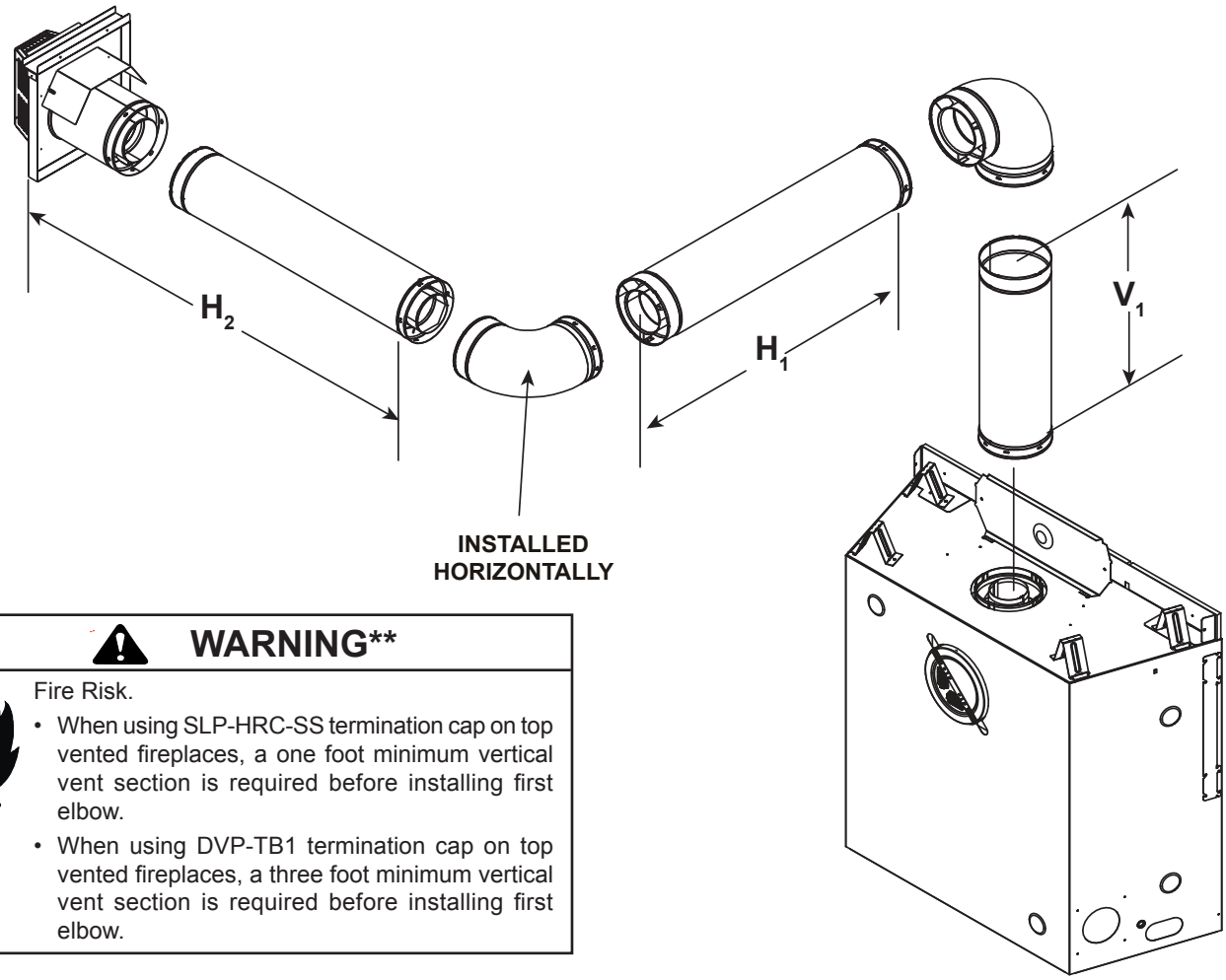

WARNING**

Fire Risk.

- When using SLP-HRC-SS termination cap on top vented fireplaces, a one foot minimum vertical vent section is required before installing first elbow.
- When using DVP-TB1 termination cap on top vented fireplaces, a three foot minimum vertical vent section is required before installing first elbow.

Figure 4.11

Top Vent - Horizontal Termination - *(continued)*

Three Elbows

V_1 Minimum**		H_1 Maximum		$H_1 + H_2$ Maximum		V_2	$V_1 + V_2$ Minimum
90 Elbow Only**		1-1/2 ft.	457 mm	2 ft.	610 mm	*	*
1/2 ft.**	152 mm	1-1/2 ft.	457 mm	4 ft.	1.2 m	*	*
1-1/2 ft.	457 mm	3 ft.	914 mm	6 ft.	1.8 m	*	*
2-1/2 ft.	762 mm	5 ft.	1.5 m	10 ft.	3.0 m	*	*
3-1/2 ft.	1.1 m	7 ft.	2.1 m	14 ft.	4.3 m	*	*
4-1/2 ft.	1.4 m	14 ft.	4.3 m	14 ft.	4.3 m	*	*
$H_1 + H_2$ MAX. =14 ft. (4.3 m) $V_1 + V_2 + H_1 + H_2$ MAX. = 40 ft. (12.2 m) No specific restrictions on this value EXCEPT $V_1 + V_2 + H_1 + H_2$ CANNOT exceed 40 ft. (12.2 m). ** See Warning Below.							

Note: There MUST be a 25% reduction in total H when using flex vent except when using the simple up and out installation. See Figure 4.8.

Note: Use SLP Series components only.

⚠ WARNING**

Fire Risk.

- When using SLP-HRC-SS termination cap on top vented fireplaces, a one foot minimum vertical vent section is required before installing first elbow.

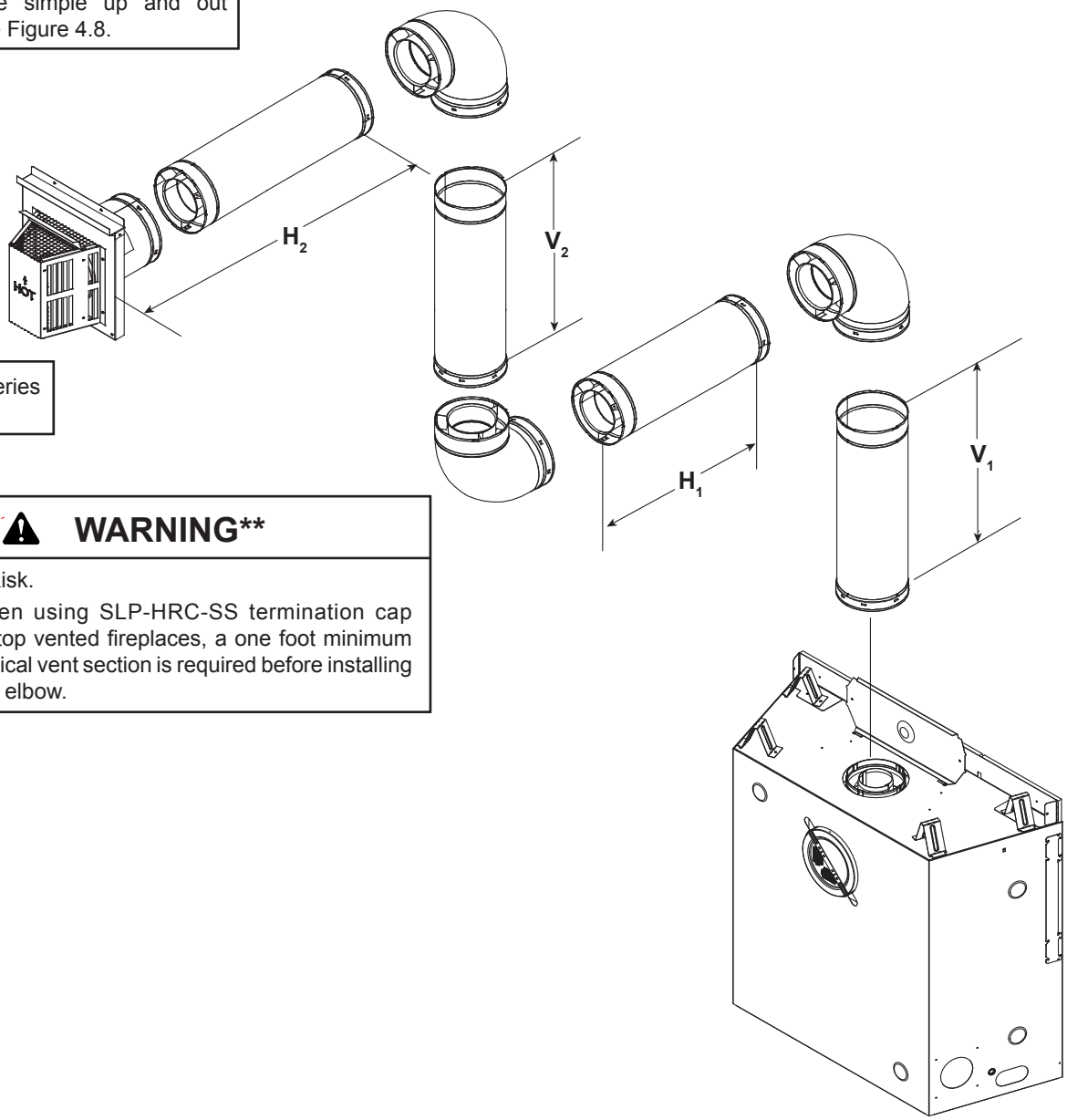

Figure 4.12

Top Vent - Vertical Termination

No Elbows

V_1 = 60 ft. Max. (18.3 m)

Note: If installing a vertical vent/termination off the top of the appliance, the optional vertical termination baffle may be needed.

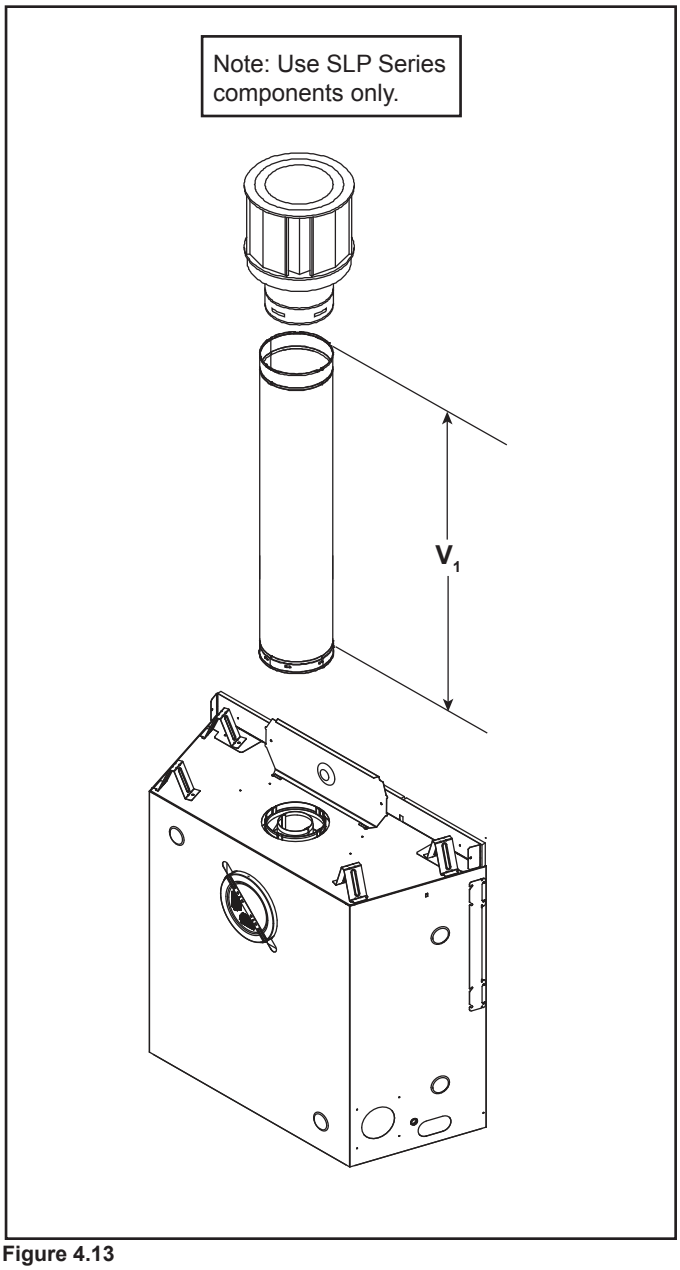

Figure 4.13

Exhaust restrictors are recommended for these vertically terminated products which have excessive draft. Exhaust restrictors will compensate for high draft, and restore visual flame height. If the vent configuration has a total vertical of 15-60 feet, an exhaust restrictor may be needed. The exhaust restrictor can be located in the appliance manual bag.

Exhaust restrictor Instructions

1. Install the exhaust restrictor over the center of the exhaust outlet in the firebox. See Figure 4.14.
2. Center the exhaust restrictor in the open end of the exhaust outlet and secure through the slots on the exhaust restrictor with the 2-1/4 in. self tapping screws provided in the appliance manual bag.

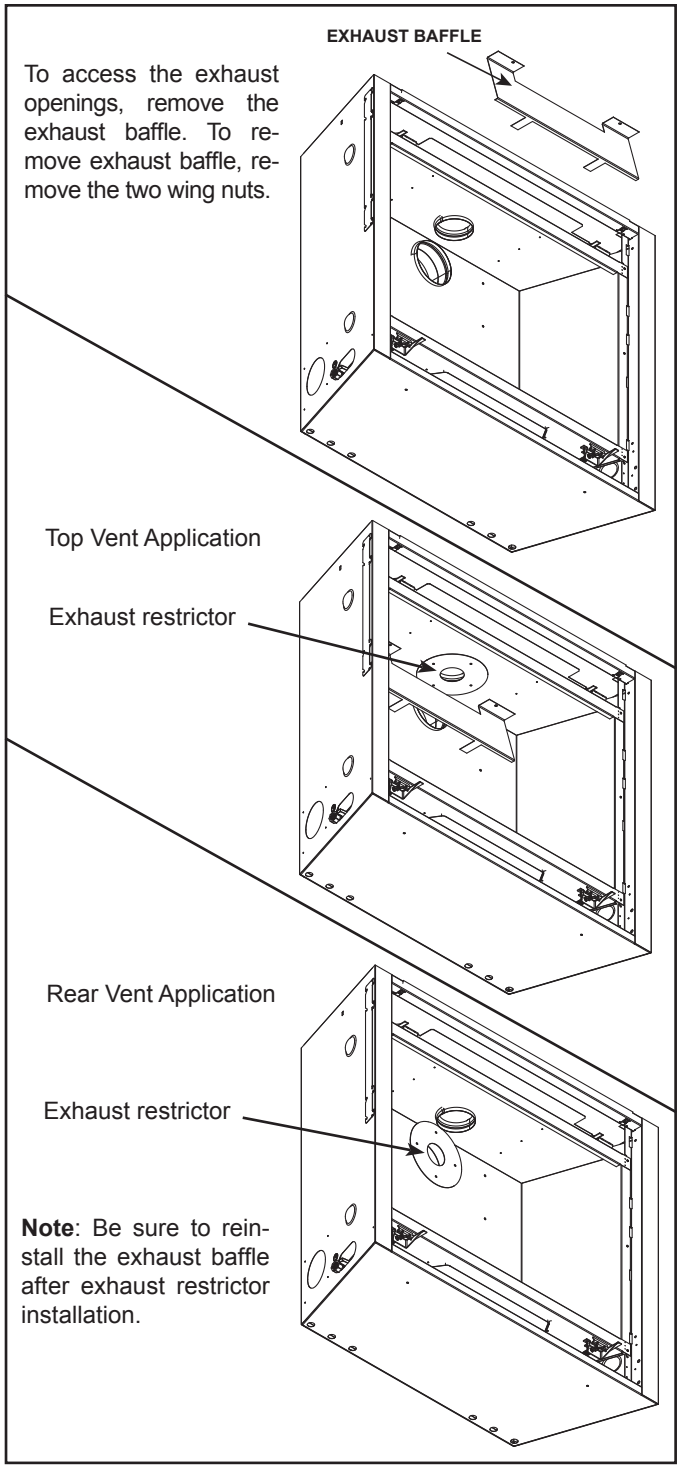

Figure 4.14

Top Vent - Vertical Termination - *(continued)*

Two Elbows

Note: Use SLP Series components only.

V_1 Minimum		H_1 Maximum		V_2	$V_1 + V_2$ Minimum
90 Elbow Only		1-1/2 ft.	457 mm	*	*
1/2 ft.	152 mm	2 ft.	610 mm	*	*
1-1/2 ft.	457 mm	3 ft.	914 mm	*	*
2-1/2 ft.	762 mm	5 ft.	1.5 m	*	*
3-1/2 ft.	1.1 m	7 ft.	2.1 m	*	*
4-1/2 ft.	1.4 m	15 ft.	4.6 m	*	*
H_1 MAX. =15 ft. (4.6 m) $V_1 + V_2 + H_1$ MAX. = 40 ft. (12.2 m) *No specific restrictions on this value EXCEPT $V_1 + V_2 + H_1 + H_2$ CANNOT exceed 40 ft. (12.2 m).					

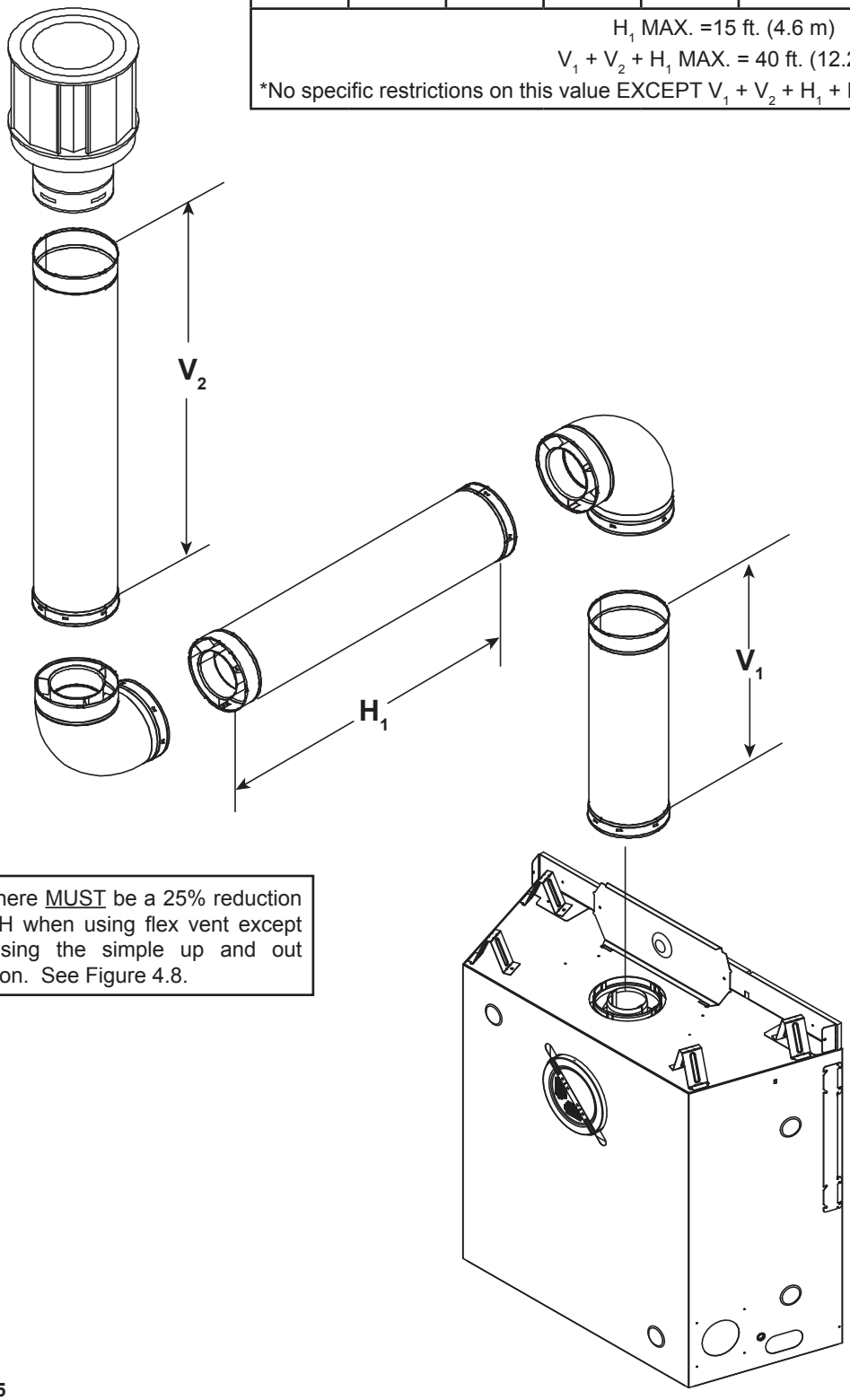

Note: There MUST be a 25% reduction in total H when using flex vent except when using the simple up and out installation. See Figure 4.8.

Figure 4.15

Top Vent - Vertical Termination - *(continued)*

Three Elbows

V_1 Minimum		$H_1 + H_2$ Maximum		V_2	$V_1 + V_2$ Minimum
90 Elbow Only		1/2 ft.	152 mm	*	*
1/2 ft.	152 mm	1 ft.	305 mm	*	*
1-1/2 ft.	457 mm	2 ft.	610 mm	*	*
2-1/2 ft.	762 mm	4 ft.	1.2 m	*	*
3-1/2 ft.	1.1 m	6 ft.	1.8 m	*	*
4-1/2 ft.	1.4 m	14 ft.	4.3 m	*	*
$H_1 + H_2$ MAX. =14 ft. (4.3 m) $V_1 + V_2 + H_1 + H_2$ MAX. = 40 ft. (12.2 m) *No specific restrictions on this value EXCEPT $V_1 + V_2 + H_1 + H_2$ CANNOT exceed 40 ft. (12.2 m).					

Note: Use SLP Series components only.

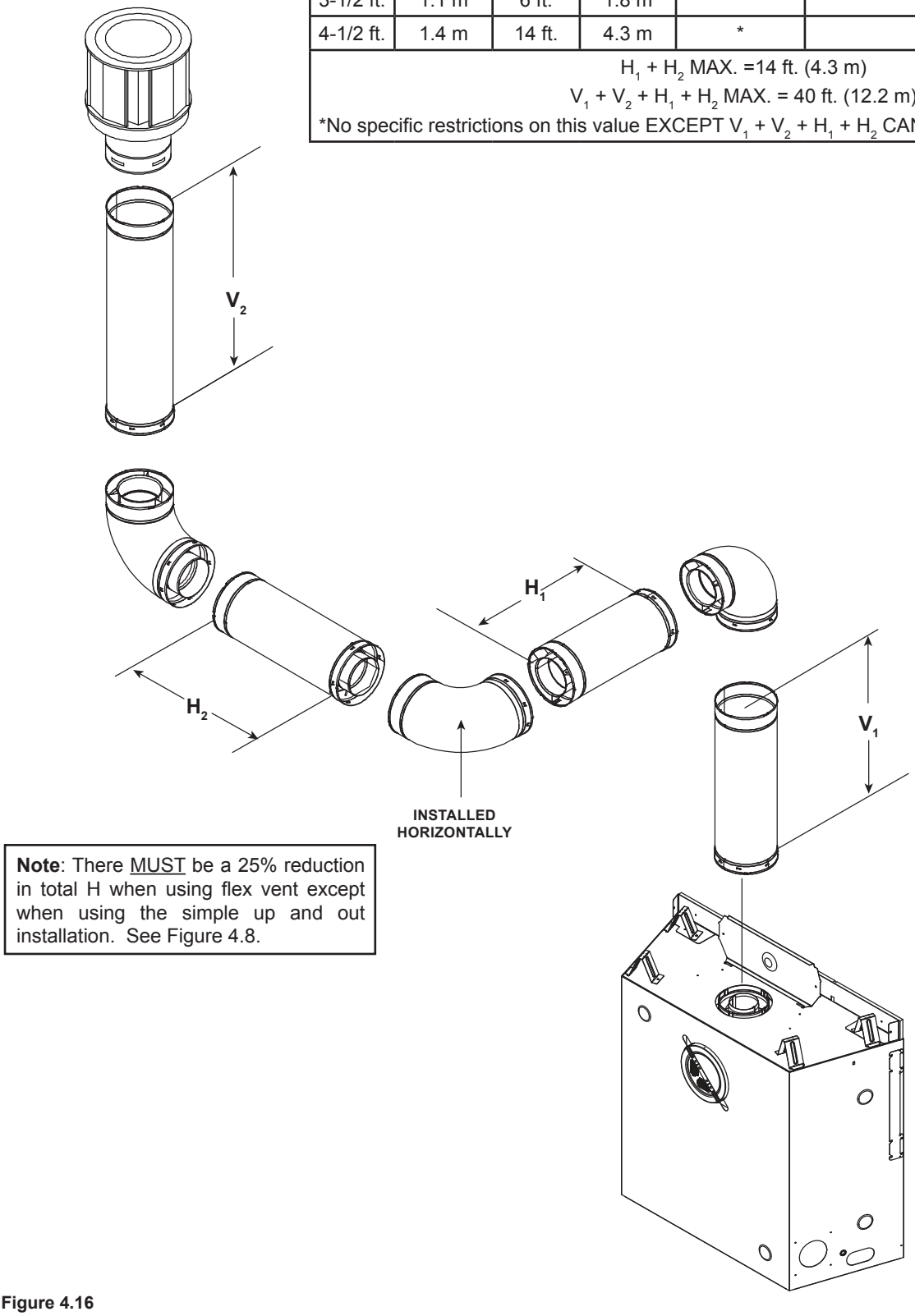

Note: There MUST be a 25% reduction in total H when using flex vent except when using the simple up and out installation. See Figure 4.8.

Figure 4.16

Four 90º Elbows

V_1 MIN.		H_1 MAX.		V_2 MIN.		H_2 MAX.		V_3 MIN.	
1-1/2 ft.	457 mm	4 ft.	1.2 m	4 ft.	1.2 m	4 ft.	1.2 m	3-1/2 ft.	1.1 m
$V_1 + V_2 + V_{3+} H_1 + H_2$ Maximum= 40 ft. (12.2 m)									

Note: Use SLP Series components only.

Note: There MUST be a 25% reduction in total H when using flex vent except when using the simple up and out installation. See Figure 4.8.

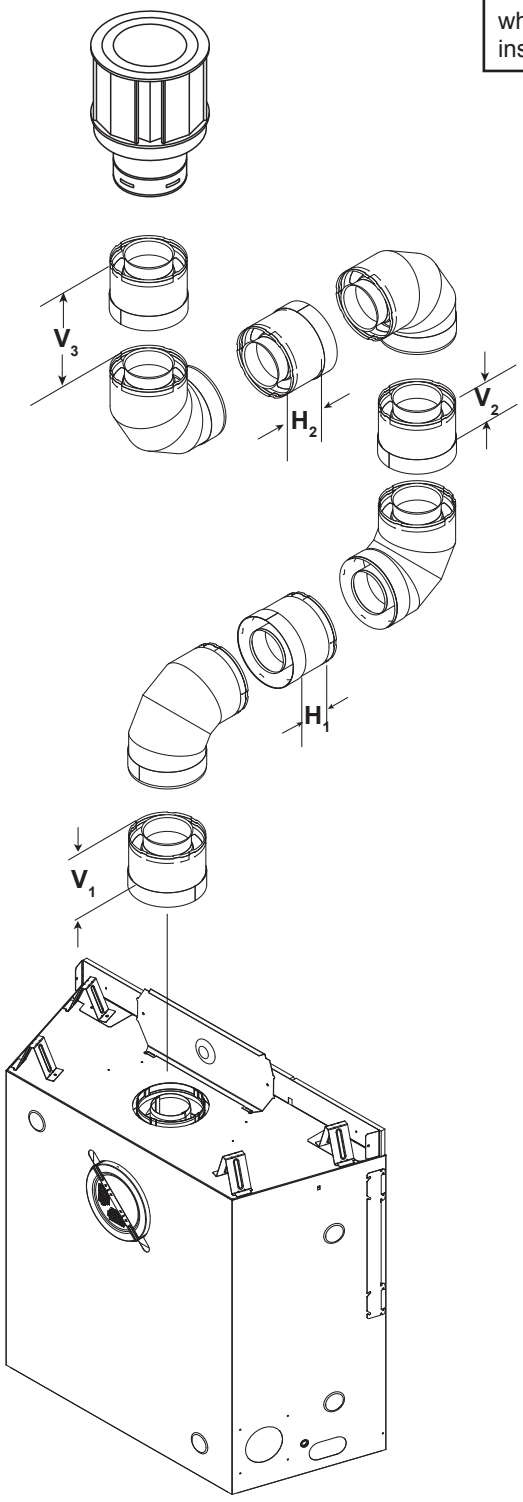

Figure 4.17

Rear Vent - Horizontal Termination
No Elbows

Note: Use DVP Series components only.

H_1 = 24 in. Max. (610 mm)

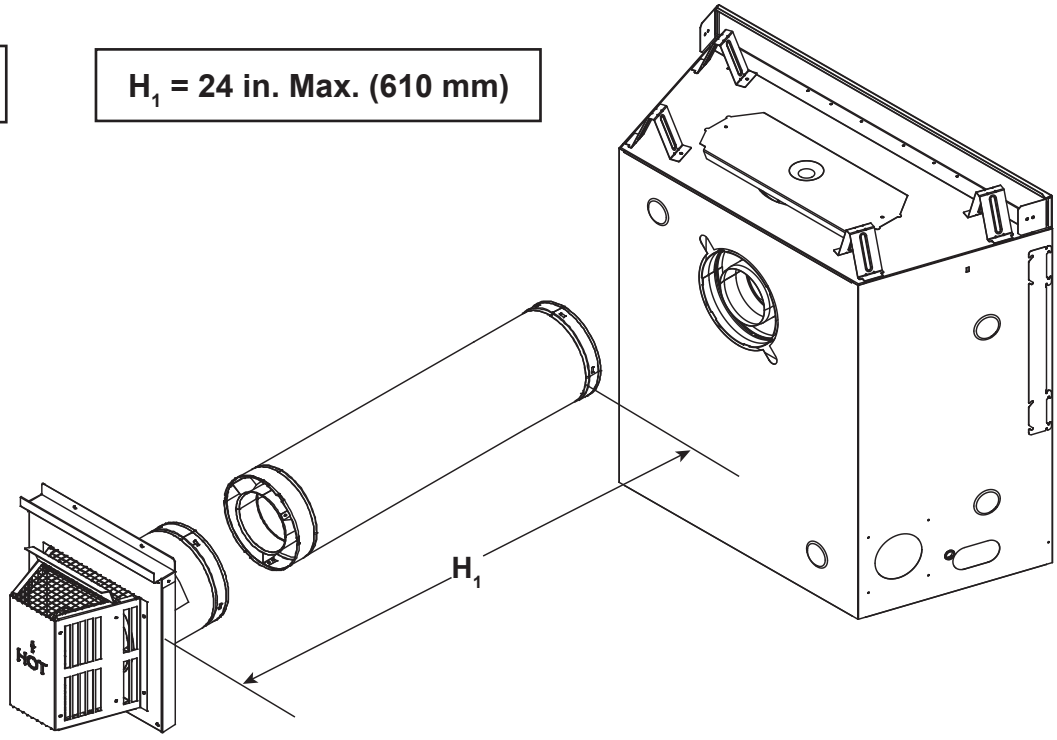

Figure 4.18

Rear Vent - Horizontal Termination
One 45º Elbow

H_1 = 9 in. (229 mm) Maximum

Note: Use DVP Series components only.

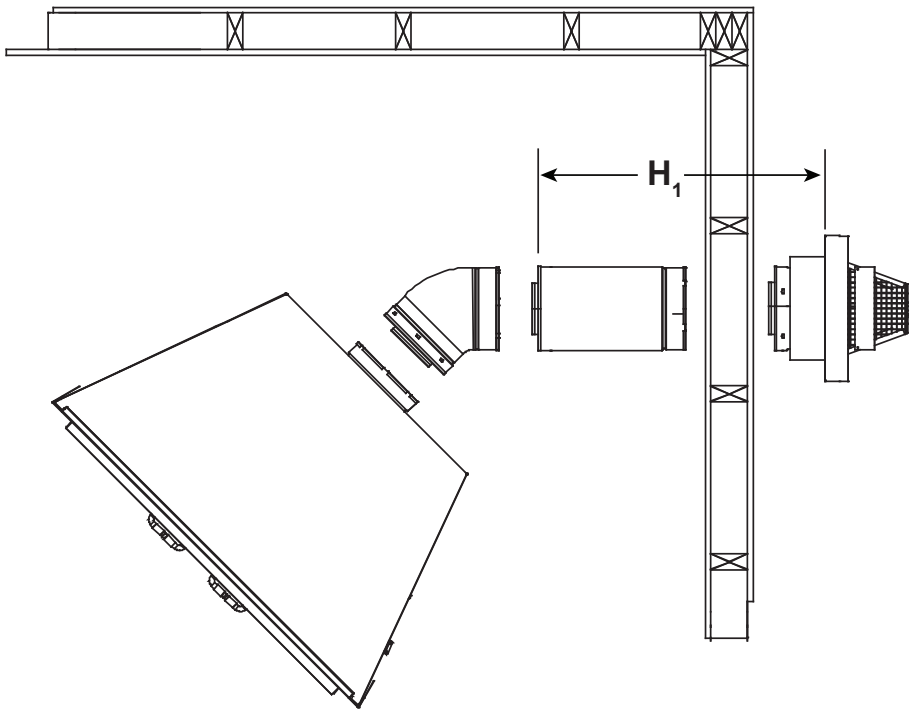

Figure 4.19

Two Elbows

Note: Use DVP Series components only.

H_1 MAX.		V_1 MIN.		H_2 MAX.		$H_1 + H_2$ MAX.	
1-1/2 ft.	457 mm	Back to back elbows		1 ft.	305 mm	2-1/2 ft.	762 mm
3 ft.	914 mm	1 ft.	305 mm	3 ft.	914 mm	6 ft.	1.8 m
5 ft.	1.5 m	3 ft.	914 mm	5 ft.	1.5 m	10 ft.	3.0 m
7 ft.	2.1 m	5 ft.	1.5 m	7 ft.	2.1 m	14 ft.	4.3 m
H_1 MAX. = 7 ft. (2.1 m) $H_1 + H_2$ MAX. = 14 ft. (4.3 m) $V_1 + H_1 + H_2$ MAX. = 40 ft. (12.2 m)							

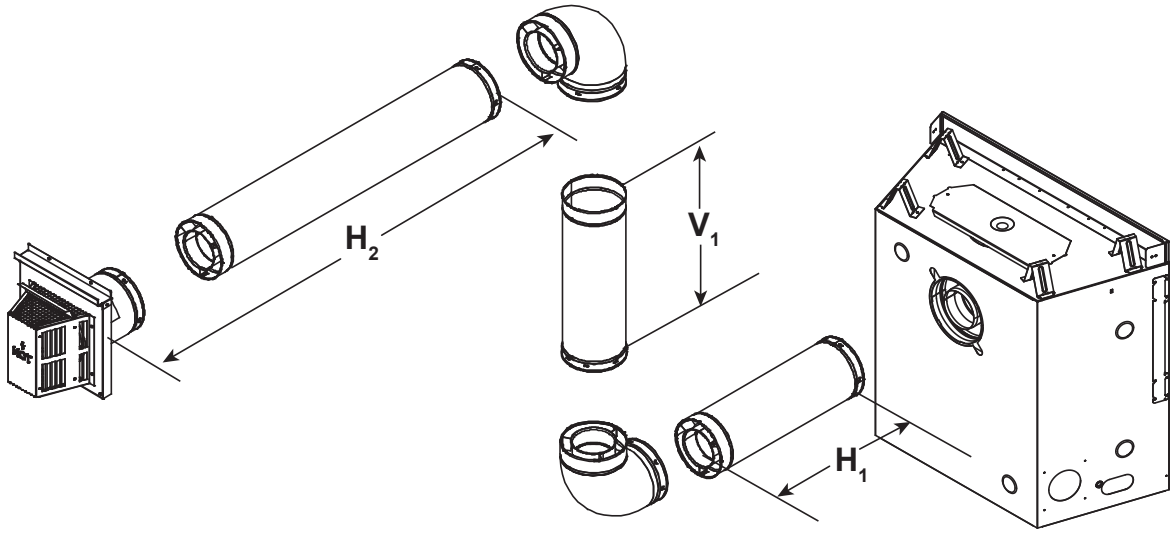

Figure 4.20

Note: Use DVP Series components only.

Three Elbows

H_1 MAX.		V_1 MIN.		$H_2 + H_3$ MAX.		$H_1 + H_2 + H_3$ MAX.	
1-1/2 ft.	457 mm	Back to back elbows		1 ft.	305 mm	2-1/2 ft.	762 mm
3-1/2 ft.	1.1 m	1 ft.	305 mm	2 ft.	610 mm	5-1/2 ft.	1.7 m
5-1/2 ft.	1.7 m	2 ft.	610 mm	4 ft.	1.2 m	9-1/2 ft.	2.9 m
7-1/2 ft.	2.3 m	3 ft.	914 mm	6 ft.	1.8 m	13-1/2 ft.	4.1 m
H_1 MAX. = 7-1/2 ft. (2.3 m) $H_1 + H_2 + H_3$ MAX. = 13-1/2 ft. (4.1 m) $V_1 + H_1 + H_2 + H_3$ MAX. = 40 ft. (12.2 m)							

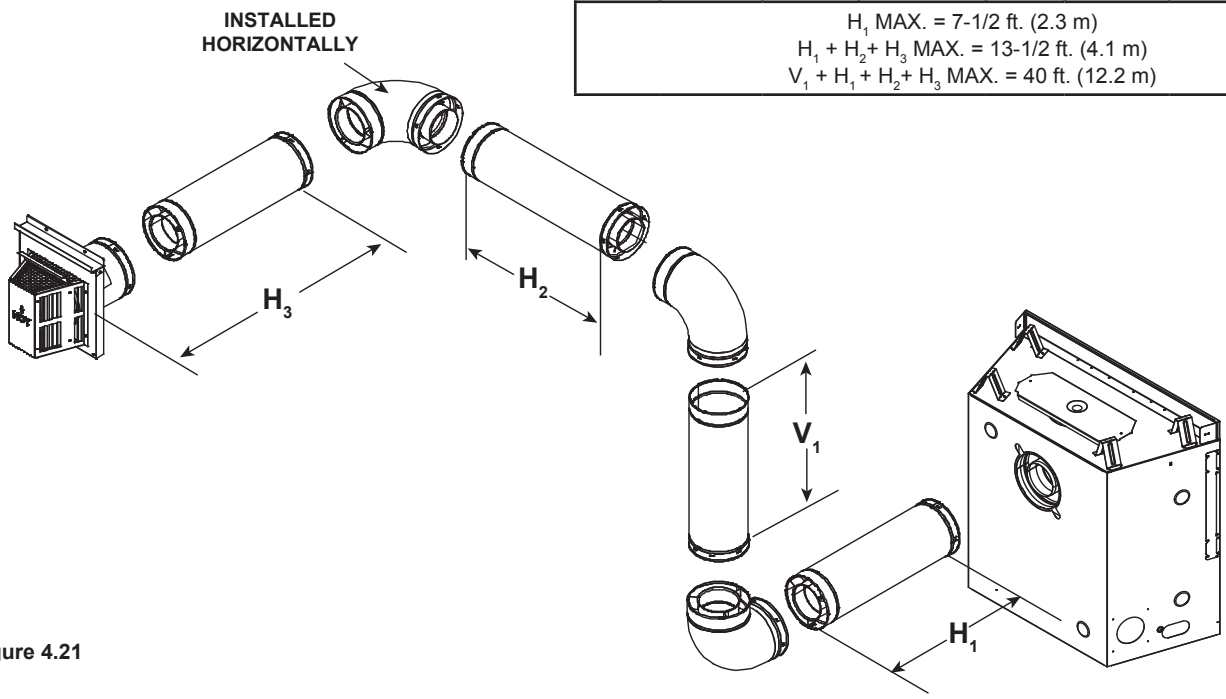

Figure 4.21

Rear Vent - Vertical Termination

One Elbow

Note: Use DVP Series components only.

V_1 MIN.		H_1 MAX.	
1 ft.	305 mm	3-1/2 ft.	1.1 m
2 ft.	610 mm	5-1/2 ft.	1.7 m
3 ft.	914 mm	7-1/2 ft.	2.3 m
H MAX. = 7-1/2 ft. (2.3 m) $V_1 + H_1$ MAX. = 40 ft. (12.2 m)			

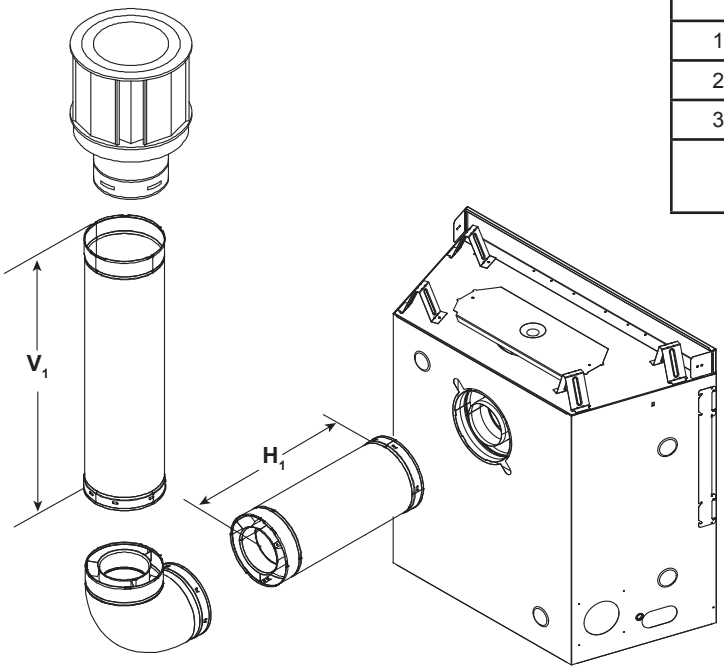

Figure 4.22

Note: Use DVP Series components only.

Two Elbows

$H_1 + H_2$ MAX		V_1 MIN.	
Back to back elbows		1/2 ft.	152 mm
2-1/2 ft.	762 mm	1 ft.	305 mm
4-1/2 ft.	1.4 m	2 ft.	610 mm
6-1/2 ft.	2.0 m	3 ft.	914 mm
H MAX. = 6-1/2 ft. (2 m) V + H+ H_1 MAX. = 40 ft. (12.2 m)			

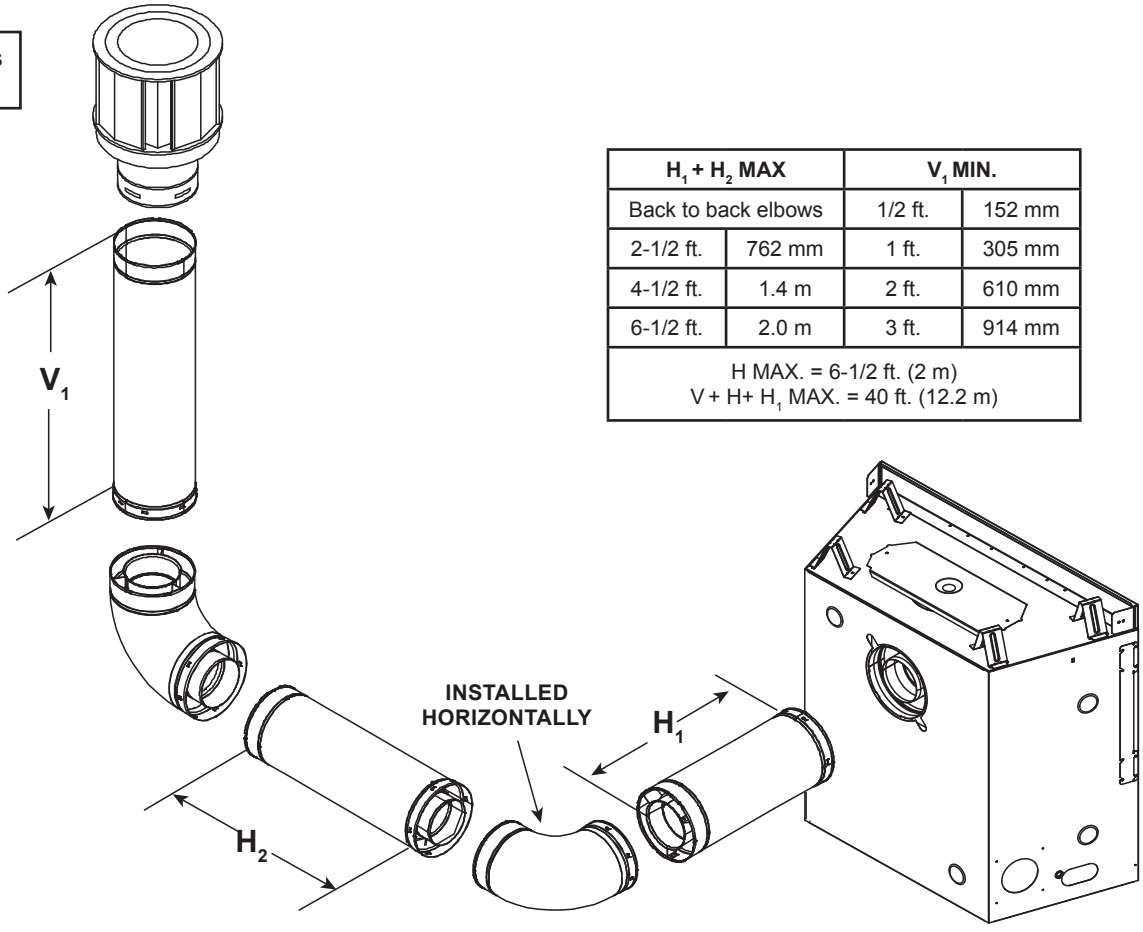

Figure 4.23

Rear Vent - Vertical Termination - *(continued)*

Three Elbows

V_1 MIN.		H_1 MAX.		H_2 MAX.		$H_1 + H_2$ MAX.		V_2	$V_1 + V_2$ Minimum
Back to back elbows		1-1/2 ft.	457 mm	1 ft.	305 mm	2-1/2 ft.	762 mm	*	*
1 ft.	305 mm	3-1/2 ft.	1.1 m	3 ft.	914 mm	6-1/2 ft.	2.0 m	*	*
2 ft.	610 mm	5-1/2 ft.	1.7 m	5 ft.	1.5 m	10-1/2 ft.	3.2 m	*	*
3 ft.	914 mm	7-1/2 ft.	2.3 m	7 ft.	2.1 m	14-1/2 ft.	4.4 m	*	*
H_1 MAX. = 7-1/2 ft. (2.3 m) $H_1 + H_2$ MAX. = 14-1/2 ft. (4.4 m) $V_1 + V_2 + H_1 + H_2$ MAX. = 40 ft. (12.2 m) *No specific restrictions on this value EXCEPT $V_1 + V_2 + H_1 + H_2$ CANNOT exceed 40 ft. (12.2 m).									

Note: Use DVP Series components only.

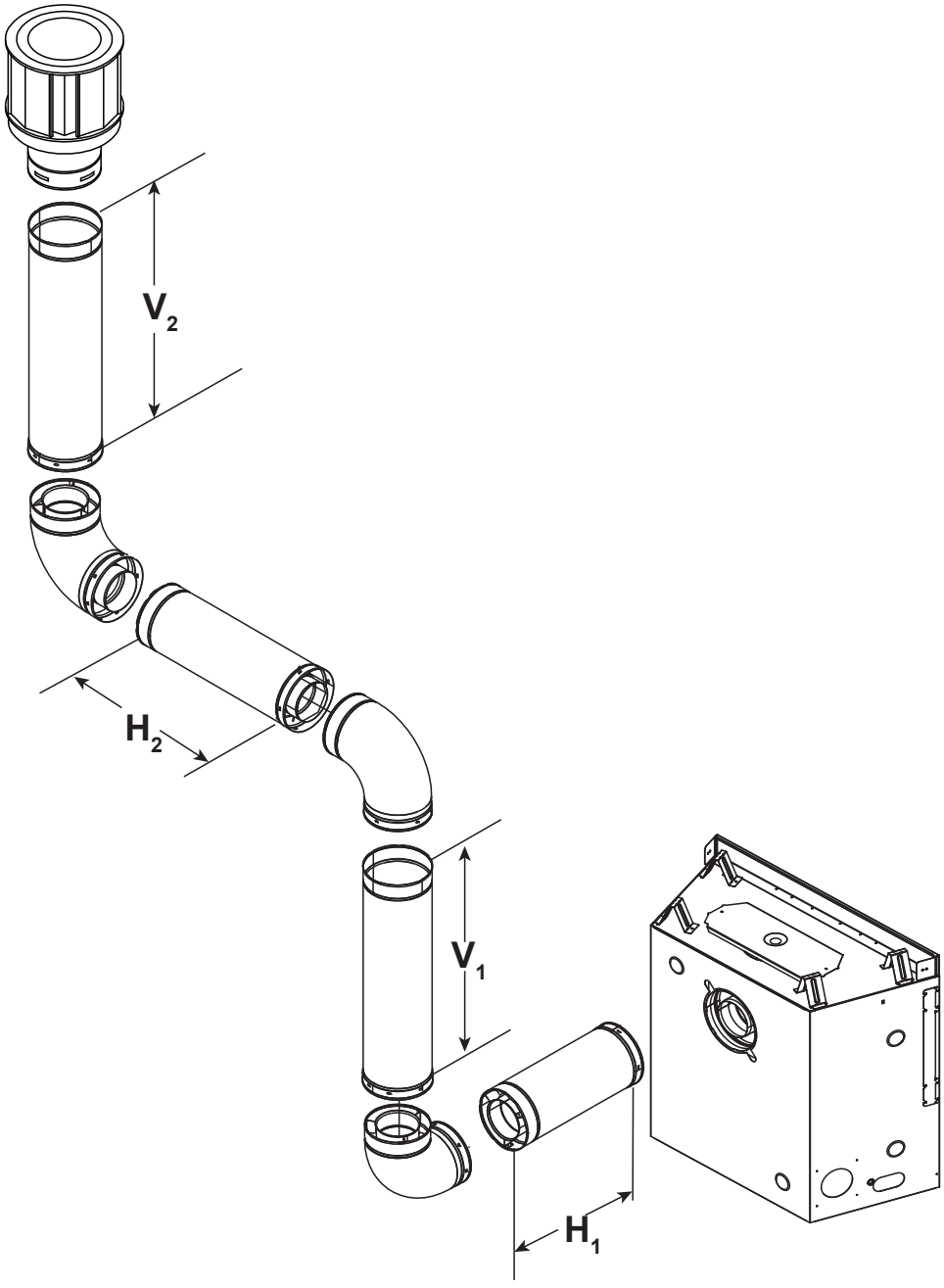

Figure 4.24

Coaxial to Colinear Venting

The coaxial to colinear adapter (DV-46DVA-GCL) is approved for installations into solid fuel masonry or factory built fireplaces that have been installed in accordance with the National, Provincial, State and local building codes. The DV-46DVA-GCL must be recessed into existing masonry fireplace. See Table 1 and Figure 4.26.

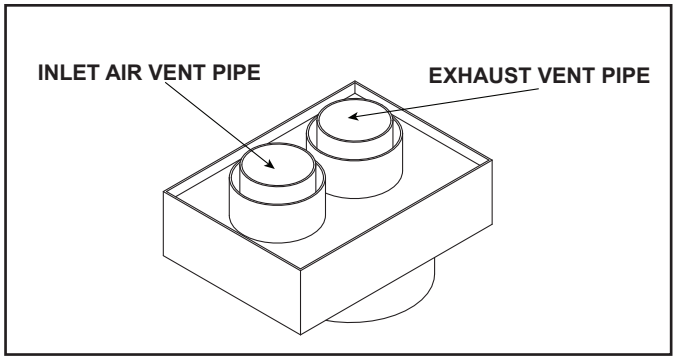

Figure 4.25. Coaxial/Colinear Appliance Connector

WARNING! Risk of Fire! *Coaxial to colinear venting configuration may only be used in existing non-combustible chimney. Installation in any other venting application could cause fire.*

Prior to installing the gas appliance:

- Have the chimney and adjacent structure inspected and cleaned by qualified professionals. Hearth & Home Technologies recommends that NFI or CSIA certified professionals, or technicians under the direction of certified professionals, conduct a minimum of a NFPA 211 Level 2 inspection of the chimney.
- Replace component parts of the chimney and fireplace as specified by the professionals.
- Ensure all joints are properly engaged and the chimney is properly secured.

Table 1

CLEARANCE TO COMBUSTIBLES REQUIREMENTS	
DV-46DVA-GCL	3 IN.
Exhaust Vent Pipe	5 IN.

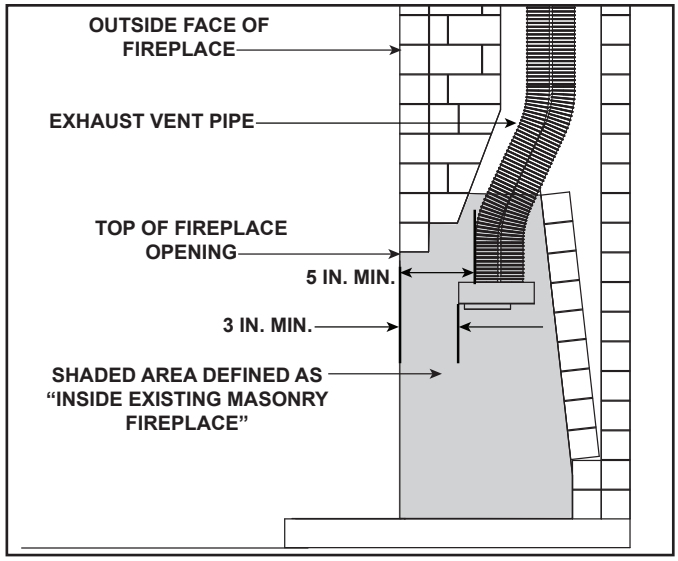

Figure 4.26. Existing Fireplace DV-46DVA-GCL Clearance Requirements

Clearances to Combustibles:

Refer to Section 3 for clearances to the appliance, mantel, mantel legs and wall projection.

Refer to Section 5 for pipe clearances to combustibles.

Termination Cap

For installation of termination cap see minimum vent heights for various pitched roofs. See Section 4.A.

Flue Damper

Fully lock the solid fuel fireplace's flue damper in the open position, OR completely remove it.

Venting Components

The LINK-DV30B is approved for use with the coaxial/colinear venting application. The LINK-DV30B kit includes:

- Two 30 foot sections of flexible vent pipe (3 inches Ø). One section is used to draw combustion air and the other section is used to expel exhaust gases.
- One vertical termination cap.

CAUTION! DO NOT use any flue restrictor when venting with the DV-46DVA-GCL adapter and LINK-DV30B kit. *This could result in poor flame appearance, sooting, pilot malfunction, or overheating.*

Connecting the DV-46DVA-GCL Adapter to Appliance

Top Vent

- Remove top seal cap and insulation if equipped. See Section 6, “Appliance Preparation.” Attach the DVP-2SL to the 8 inch starting collar. Follow installation instructions included with DVP-2SL kit. Attach the DV-46DVA-GCL adapter to the appliance starting collar with 3-1/2 in. self-tapping screws. See Figure 4.27.

Rear Vent

- Remove the rear seal cap and insulation if equipped. Connect the DVP-2SL adapter to the vertically positioned elbow. Follow installation instructions included with DVP-2SL kit. Secure DV-46DVA-GCL adapter to DVP-2SL with 3-1/2 in. self-tapping screws. See Figure 4.27.

Connecting the LINK-DV30B to the DV-46DVA-GCL adapter

- Insert the two sections of flexible vent pipe down the existing chimney.
- Attach one section of stainless steel flex pipe to the exhaust collar on top of the DV-46DVA-GCL adapter with three screws.
- Attach one section of flexible vent pipe to the stainless steel flex pipe with three self-tapping screws.
- Attach one section of flexible vent pipe to the inlet collar on top of the DV-46DVA-GCL adapter with three self-tapping screws.
- To minimize cold air drafts, seal around the flex vents at the damper inside the chimney with non-combustible unfaced fiberglass or rock wool insulation.

The DV-46DVA-GCL adapter must be recessed into existing masonry fireplace. This measurement is taken from the top of the fireplace opening. See Table 1 and Figure 4.26.

WARNING! Risk of Fire, Explosion or Asphyxiation! *Do NOT connect this gas appliance to a chimney flue serving a separate solid fuel or gas burning appliance.*

- *May impair safe operation of this appliance or other appliances connected to the flue.*
- *Vent this appliance directly outside.*
- *Use separate vent system for this appliance.*

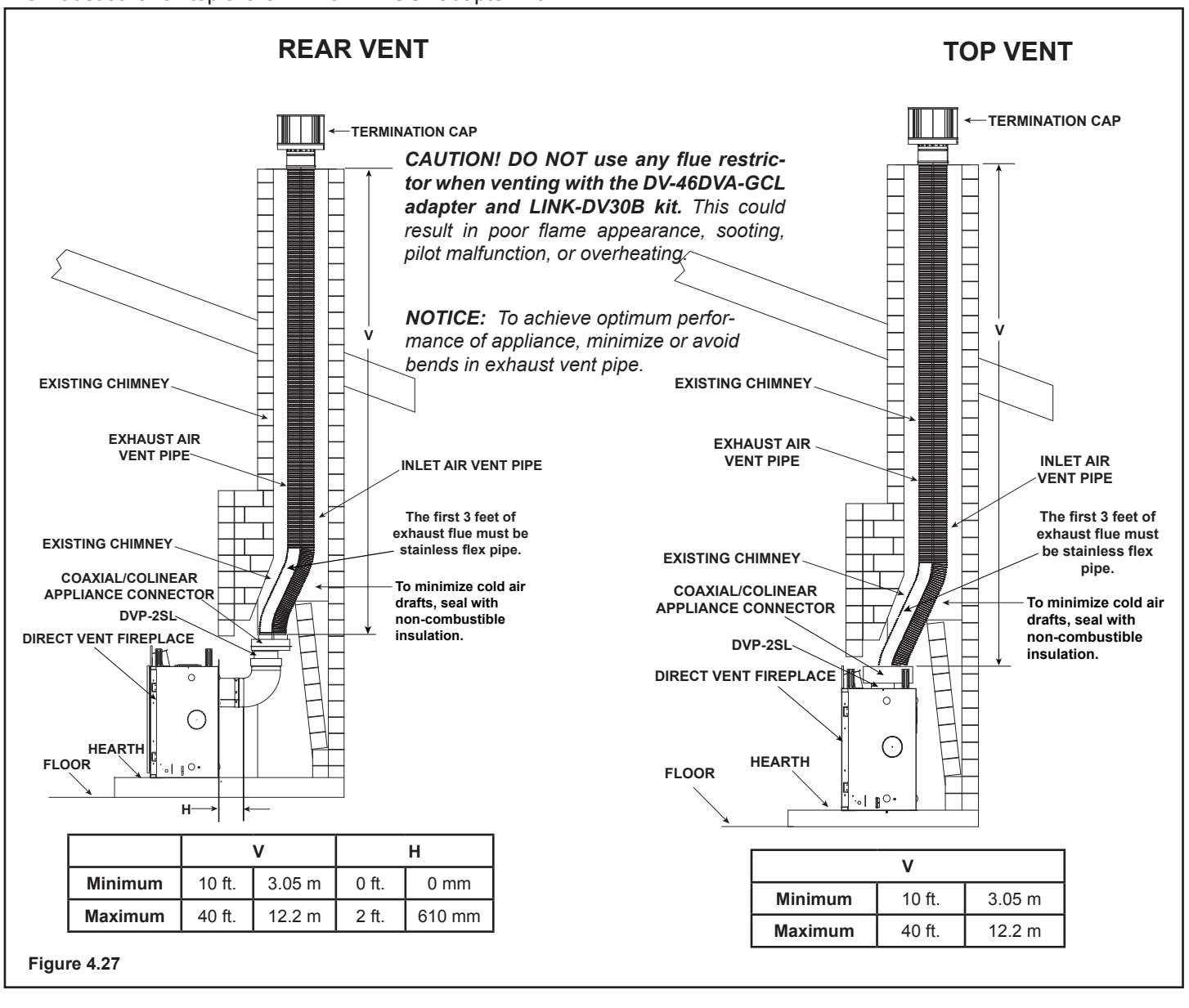

	V		H	
Minimum	10 ft.	3.05 m	0 ft.	0 mm
Maximum	40 ft.	12.2 m	2 ft.	610 mm

V		
Minimum	10 ft.	3.05 m
Maximum	40 ft.	12.2 m

Figure 4.27

5 Vent Clearances and Framing

A. Pipe Clearances to Combustibles

WARNING! Risk of Fire! *Maintain air space clearance to vent.* ***DO NOT*** *pack insulation or other combustibles:*

- *Between ceiling firestops*
- *Between wall shield firestops*
- *Around vent system*

Failure to keep insulation or other material away from vent pipe could cause overheating and fire.

Note: Heat shields MUST overlap by a minimum of 1-1/2 in. (38 mm).
- **DVP heat shield** - designed to be used on a wall 4 in. to 7-1/4 in. (102 mm to 184 mm) thick.
- If wall thickness is less than 4 in. the existing heat shields must be field trimmed. If wall thickness is greater than 7-1/4 in. a DVP-HSM-B will be required.
- **SLP heat shield** - designed to be used on a wall 4-3/8 in. to 7-5/8 in. (111 mm to 194 mm thick).
- If wall thickness is less than 4-3/8 the existing heat shields must be field trimmed. If wall thickness is greater than 7-5/8 in. a DVP-HSM-B will be required.

(DVP-SLP Pipe Shown)

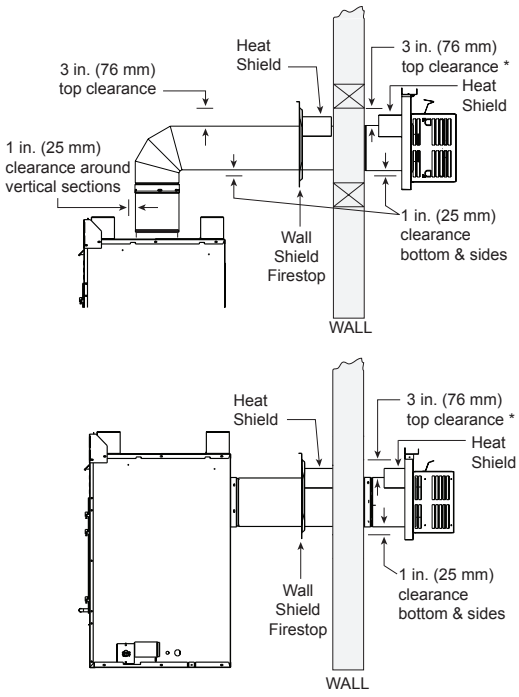

* When using SLP pipe, minimum clearances from the vent pipe to combustible materials at inside wall firestops are: Top: 2-1/2 in. (64 mm); Bottom: 1/2 in. (13 mm); Sides: 1 in. (25 mm)

Figure 5.1 Horizontal Venting Clearances To Combustible Materials

B. Wall Penetration Framing/Firestops

Combustible Wall Penetration

Whenever a combustible wall is penetrated, you must frame a hole for the wall shield firestop(s). The wall shield firestop maintains minimum clearances and prevents cold air infiltration.

- The opening must be framed on all four sides using the same size framing materials as those used in the wall construction.
- SLP pipe - A wall shield firestop must be placed on each side of an interior wall. A minimum 1-1/2 in. (38 mm) overlap of attached heat shields must be maintained.
- DVP pipe - A wall shield firestop is required on one side only on interior walls. If your local inspector requires a wall shield firestop on both sides, then both wall shield firestops must have a heat shield (refer to Section 12.A.) attached to them.
- See Section 7.G. for information for regarding the installation of a horizontal termination cap.

Non-Combustible Wall Penetration

If the hole being penetrated is surrounded by non-combustible materials such as concrete, a hole with diameter one inch greater than the pipe is acceptable.

Whenever a non-combustible wall is penetrated, the wall shield firestop is only required on one side and no heat shield is necessary.

WARNING! Risk of Fire! *Elbow heat shield required when V_1 = less than 1-1/2 ft. Clearances to combustibles must be maintained. See Section 5.A.*

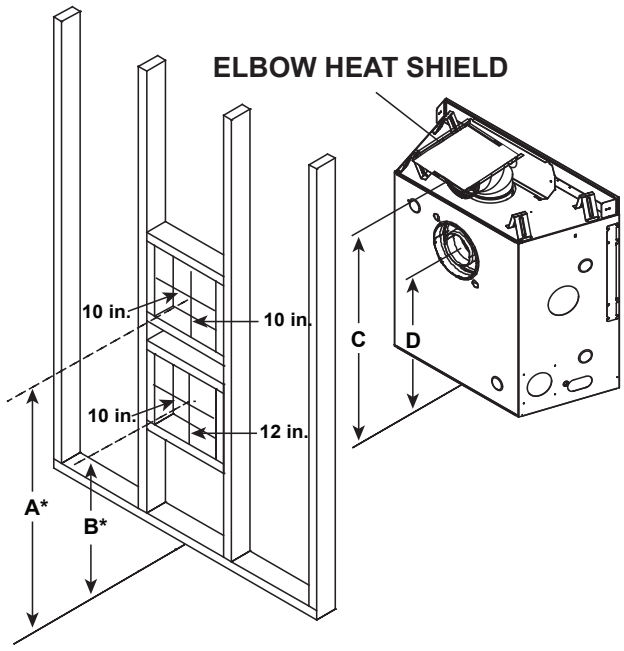

		A*	B*	C	D
SL-5F	in.	37	24-3/8	36	23-3/8
	mm	940	619	914	594
SL-7F	in.	41	27-7/8	40	26-7/8
	mm	1041	708	1016	683

* Shows center of vent framing hole for top or rear venting. The center of the hole is one (1) in. (25.4 mm) above the center of the horizontal vent pipe.

Figure 5.2 Wall Penetration

C. Ceiling Firestop/Floor Penetration Framing

A ceiling firestop **MUST** be used between floors and attics.

- **DVP pipe only** - Frame an opening 10 in. by 10 in. (254 mm by 254 mm) whenever the vent penetrates a ceiling/floor (see Figure 5.3).
- **SLP pipe only** - Frame opening 9 in. x 9 in. (229 mm x 229 mm) whenever the vent penetrates a ceiling/floor (see Figure 5.3).
- Frame the area with the same sized lumber as used in ceiling/floor joist.
- The ceiling firestop may be installed above or below the ceiling joists when installed with a attic insulation shield. It must be under joists between floors that are not insulated. Refer to Figure 5.4.
- Secure with three fasteners on each side.

WARNING! Risk of Fire! DO NOT pack insulation around the vent. Insulation must be kept back from the pipe to prevent overheating.

D. Install Attic Insulation Shield

***WARNING! Fire Risk. DO NOT** allow loose materials or insulation to touch vent. Hearth & Home Technologies requires the use of an attic shield.*

The International Fuel Gas Code requires an attic shield constructed of 26 gauge minimum steel that extends at least 2 in. (51 mm) above insulation.

- Attic insulation shields must meet specified clearances to combustible materials and be secured in place.
- An attic insulation shield kit is available from Hearth & Home Technologies. Contact your dealer to order. Install attic insulation shield according to instructions included with kit.

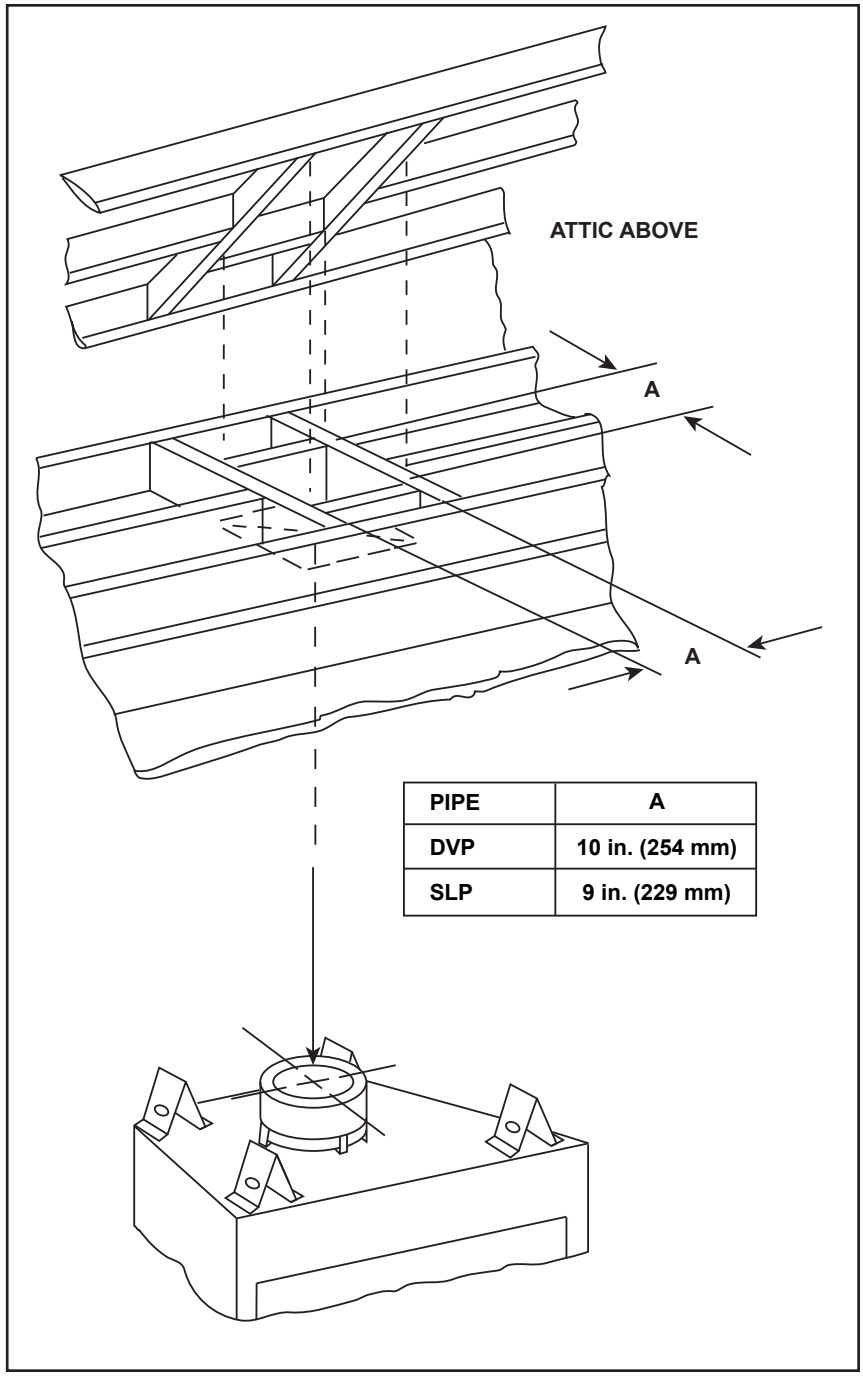

PIPE	A
DVP	10 in. (254 mm)
SLP	9 in. (229 mm)

Figure 5.3 Installing Ceiling Firestop

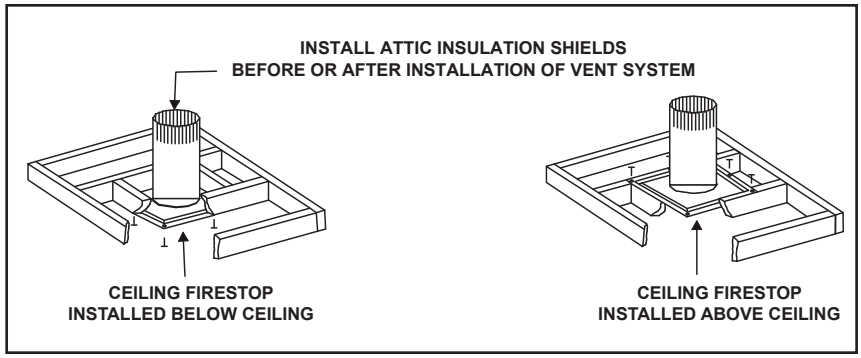

Figure 5.4 Installing the Attic Shield

6 Appliance Preparation

A. Vent Collar Preparation - Top or Rear

CAUTION! Risk of Cuts, Abrasions or Flying Debris. *Wear protective gloves and safety glasses during installation. Sheet metal edges are sharp.*

NOTICE: *Once appliance is set up for top or rear venting, it CANNOT be changed at a later time.*

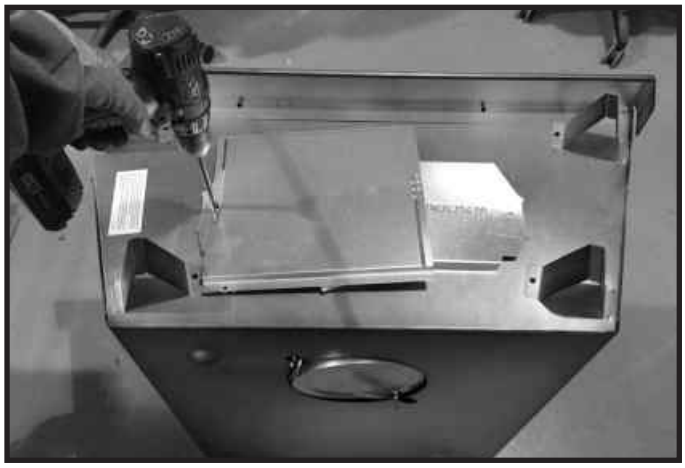

Figure 6.1 For top vent, remove the screw holding the elbow heat shield in place.

Figure 6.2 Remove the two screws holding the top heat shield in place. For rear vent, see next page.

WARNING! Risk of Fire! *Do not remove heat shield. Elevated header temperatures may cause a fire.*

Figure 6.3 Rotate the top heat shield to the vertical position as shown above. The heat shield must remain in the vertical position.

Note: Actual appliance may look different than the appliance shown in this section.

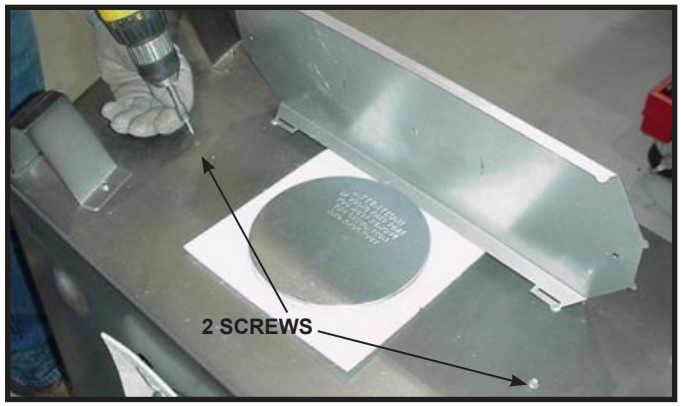

Figure 6.4 Replace the two screws as shown.

Figure 6.5 Remove the seal cap.

Figure 6.6 Remove the insulation basket and white insulation from the center vent pipe.

Figure 6.7 Remove the insulation from the outer vent pipe.

Rear Vent

NOTICE: *Once appliance is set up for top or rear venting, it CANNOT be changed at a later time.*

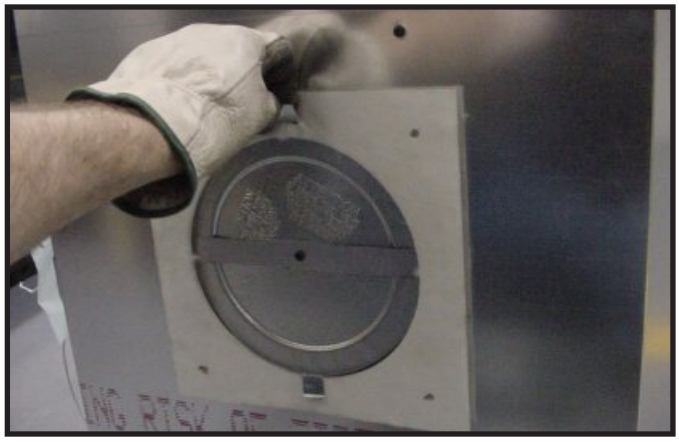

Figure 6.8 Fold the tabs toward the center of the fire plug (90º) and remove the insulation gasket.

Figure 6.9 Cut the metal retaining band and fold the sides out.

NOTICE: *Once the seal cap has been removed it CANNOT be reattached.*

Figure 6.10 Fold the center parts of the retaining band toward the center as shown. Remove the seal cap.

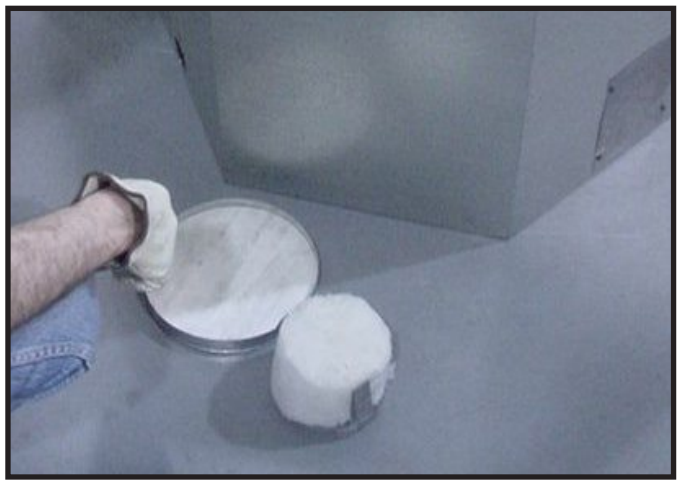

Figure 6.11 Discard the seal cap, remove and discard the insulation basket. Note: Once the seal cap has been removed it CANNOT be reattached.

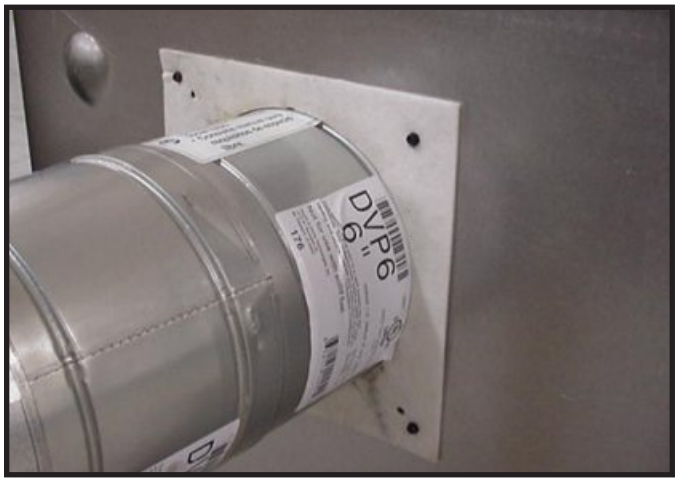

Figure 6.12 Attach the first vent section (it will snap into place). Slide the insulation gasket onto the vent section, up against the appliance and over the tabs. Use four self-tapping screws to secure gasket to outer wrap.

B. Securing and Leveling the Appliance

WARNING! Risk of Fire! *Prevent contact with:*

- *Sagging or loose insulation*
- *Insulation backing or plastic*
- *Framing and other combustible materials*

Block openings into the chase to prevent entry of blown-in insulation. Make sure insulation and other materials are secured.

DO NOT *notch the framing around the appliance standoffs.*

Failure to maintain air space clearance could cause overheating and fire.

The diagram shows how to properly position and secure the appliance. See Figure 6.13. Nailing tabs are provided to secure the appliance to the framing members.

- Bend out nailing tabs on each side.
- Place the appliance into position.
- Keep nailing tabs flush with the framing.
- Level the appliance from side to side and front to back.
- Shim the appliance as necessary. It is acceptable to use wood shims underneath the appliance.
- Secure the appliance to the framing by using nails or screws through the nailing tabs.
- Optional: Secure the appliance to the floor by inserting two screws through the pilot holes at the bottom of the appliance.

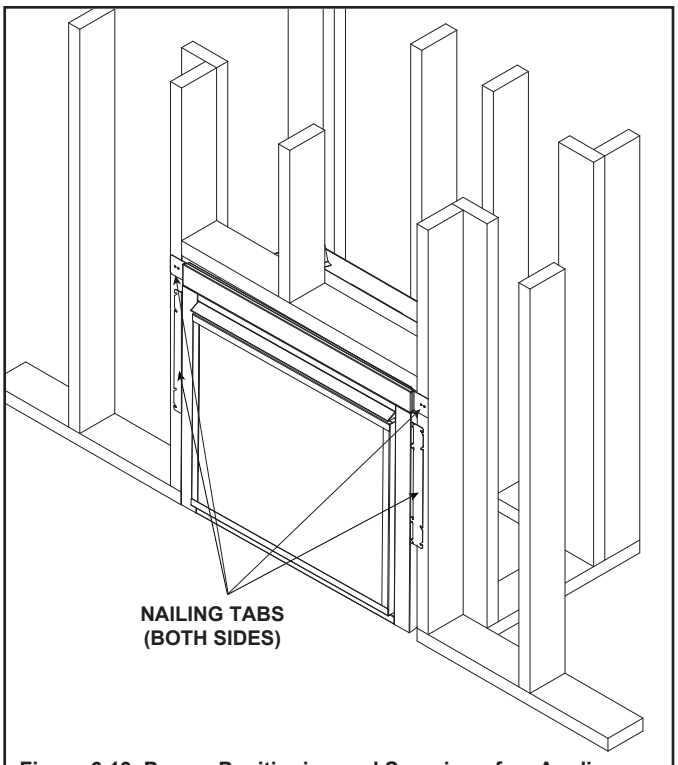

Figure 6.13 Proper Positioning and Securing of an Appliance

7 Venting and Chimneys

A. Assemble Vent Sections (DVP Pipe)

Attach Vent to the Firebox Assembly

Note: The end of the pipe sections with the lanced tabs will face toward the appliance.

Attach the first pipe section to the starting collar:

- Lanced pipe end of the starting collar.
- Inner pipe over inner collar.
- Push the pipe section until all lanced tabs snap in place.
- Lightly tug on pipe to confirm it has locked.

Required Commercial, Multi-family (Multi-level exceeding two stories), or High-Rise Applications

All outer pipe joints must be sealed with 100% silicone (300º F minimum continuous exposure rating), including the slip section that connects directly to the horizontal termination cap.

- Apply a bead of silicone sealant (300º F minimum continuous exposure rating) inside the female outer pipe joint prior to joining sections. See Figure 7.1. **OR**

  Apply a bead of silicone sealant (300º F minimum continuous exposure rating) to the outside of connecting joint after joining sections **OR**

  Apply aluminum foil tape (300º F minimum continuous exposure rating) to the outside of connecting joint after joining sections. On horizontal pipe runs, it is recommended that the tape seam is positioned on the bottom side of the vent pipe.

- Only outer pipes need to be sealed. All unit collar, pipe, slip section, elbow and cap outer flues shall be sealed in this manner, unless otherwise stated.

***WARNING! Risk of Fire or Explosion! DO NOT** break silicone seals on slip sections. Use care when removing termination cap from slip pipe. If slip section seals are broken during removal of the termination cap, vent could leak.*

Assemble Pipe Sections

Per Figure 7.2:

- Start the inner pipe on the lanced end of section A into the flared end of section B.
- Start the outer pipe of section A over the outer pipe of section B.
- Once both vents sections are started, push firmly until all lanced tabs lock into place.
- Lightly tug on the pipe to confirm the tabs have locked.

It is acceptable to use screws no longer than 1/2 in. (13 mm) to hold outer pipe sections together. If predrilling holes, **DO NOT** penetrate inner pipe.

For 90º and 45º elbows that are changing the vent direction from horizontal to vertical, one screw minimum should be put in the outer flue at the horizontal elbow joint to prevent the elbow from rotating. Use screws no longer than 1/2 in. (13 mm). If predrilling screw holes, **DO NOT** penetrate inner pipe.

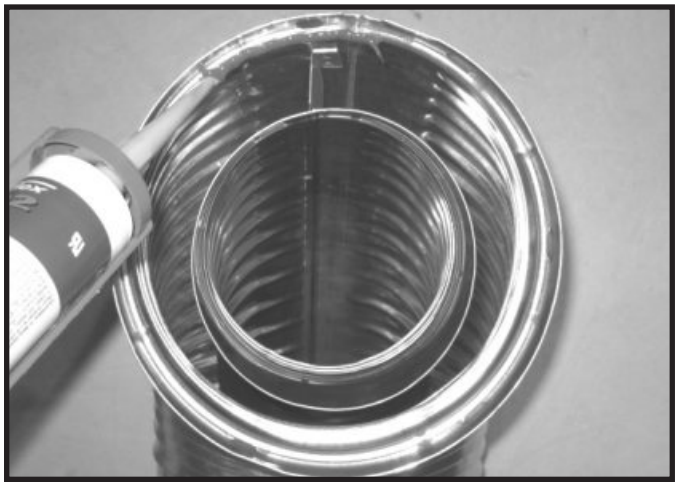

Figure 7.1 High Temperature Silicone Sealant

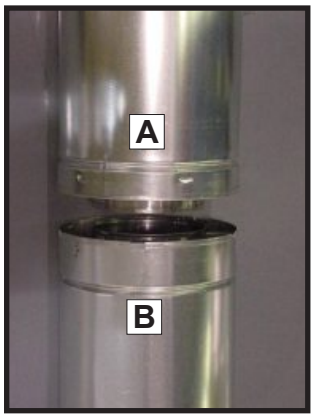

Figure 7.2

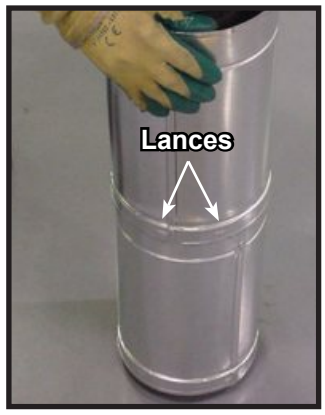

Figure 7.3

Note: Make sure that the seams are not aligned to prevent unintentional disconnection.

CORRECT

INCORRECT

Figure 7.4 Seams

B. Assemble Vent Sections (SLP Pipe)

To attach the first vent component to the starting collars of the appliance:

- Lock the vent components into place by sliding the pipe section onto the collar.
- Align the seam of the pipe and seam of collar to allow engagement. Rotate the vent component to lock into place. Use this procedure for all vent components. See Figure 7.5.
- Slide the gasket over the first vent section and place it flush to the appliance. This will prevent cold air infiltration. Caulk with a minimum of 300ºF continuous exposure rating may be used to hold the part in place.
- Continue adding vent components, locking each succeeding component into place.
- Ensure that each succeeding vent component is securely fitted and locked into the preceding component.

Required Commercial, Multi-family (Multi-level exceeding two stories), or High-Rise Applications

All outer pipe joints must be sealed with high temperature silicone (300º F minimum continuous exposure rating), including the slip section that connects directly to the horizontal termination cap.

- Apply a bead of silicone sealant (300º F minimum continuous exposure rating) inside the female outer pipe joint prior to joining sections. See Figure 7.1. **OR**

  Apply a bead of silicone sealant (300º F minimum continuous exposure rating) to the outside of connecting joint after joining sections **OR**

  Apply aluminum foil tape (300º F minimum continuous exposure rating) to the outside of connecting joint after joining sections. On horizontal pipe runs, it is recommended that the tape seam is positioned on the bottom side of the vent pipe.
- Only outer pipes need to be sealed. All unit collar, pipe, slip section, elbow and cap outer flues shall be sealed in this manner, unless otherwise stated.

***WARNING! Risk of Fire or Explosion! DO NOT** break silicone seals on slip sections. Use care when removing termination cap from slip pipe. If slip section seals are broken during removal of the termination cap, vent could leak.*

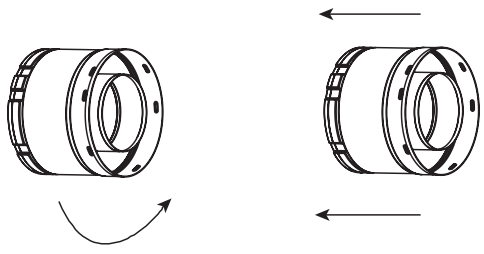

Note: Align seams to engage pipe, then rotate counterclockwise to lock

Figure 7.5 Adding Venting Components

C. Assemble Slip Sections

- Slide the inner flue of the slip section into the inner flue of the pipe section and the outer flue of the slip section over the outer flue of the pipe section. See Figure 7.6.
- Slide together to the desired length.

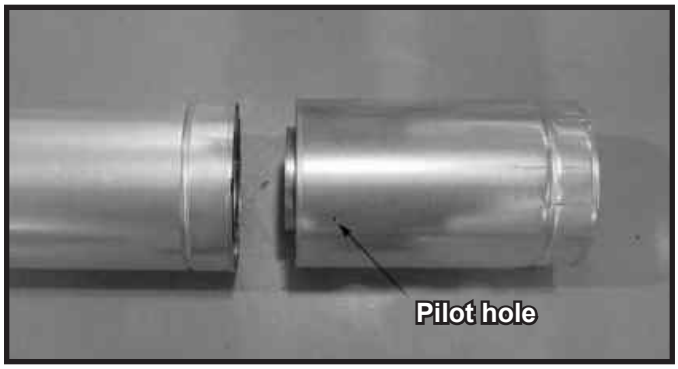

Figure 7.6 Slip Section Pilot Holes

- Maintain a 1-1/2 in. (38 mm) overlap between the slip section and the pipe section.
- Secure the pipe and slip section with two screws no longer than 1/2 in. (13 mm), using the pilot holes in the slip section. See Figure 7.7.

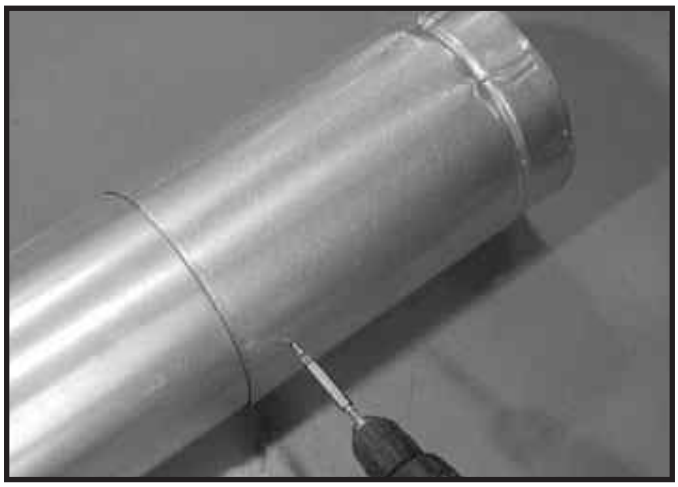

Figure 7.7 Screws into Slip Section

- Continue adding pipe as necessary following instructions in “Assembling Pipe Sections.”

***NOTICE:** If slip section is too long, the inner and outer flues of the slip section can be cut to the desired length.*

***NOTICE:** When installing a vent system with an HRC termination cap, all pipe system joints shall be sealed using a high temperature silicone sealant (300º F minimum continuous exposure rating).*

- *Apply a bead of silicone sealant (300º F minimum continuous exposure rating) inside the female outer pipe joint prior to joining sections.*
- *Only outer pipes are sealed, sealing the inner flue is not required.*
- *All unit collar, pipe, slip section, elbow and cap outer flues shall be sealed.*

D. Secure the Vent Sections

- Vertical runs originating off the top of the appliance, with no offsets, must be supported every 8 ft. (2.44 m) after the maximum allowed 25 ft. (7.62 m) of unsupported rise.
- Vertical runs originating off the rear of the appliance, or after any elbow, must be supported every 8 ft. (2.44 m).
- Horizontal runs must be supported every 5 feet (1.52 m).
- Vent supports or plumbers strap (spaced 120º apart) may be used to support vent sections. See Figures 7.8 and 7.9.
- Wall shield firestops may be used to provide horizontal support to vent sections.
- SLP ceiling firestops have tabs that may be used to provide vertical support.

WARNING! Risk of Fire, Explosion or Asphyxiation! *Improper support could allow vent to sag and separate. Use vent run supports and connect vent sections per installation instructions.* ***DO NOT*** *allow vent to sag below connection point to appliance.*

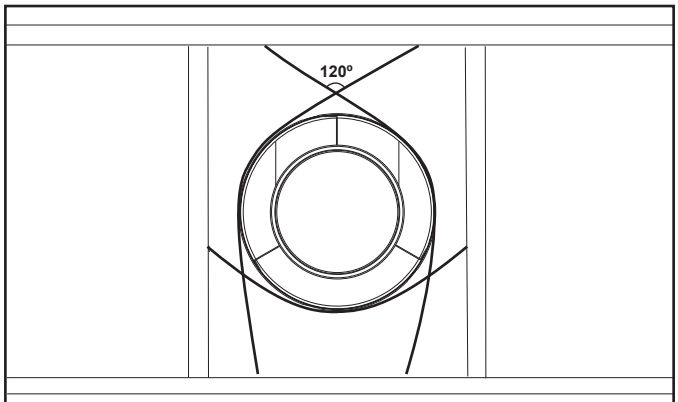

Figure 7.8 Securing Vertical Pipe Sections

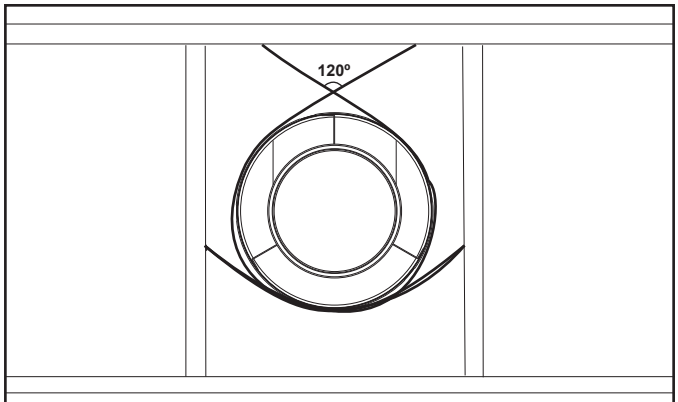

Figure 7.9 Securing Horizontal Pipe Sections

E. Disassemble Vent Sections

- Rotate either section (see Figure 7.10) so the seams on both pipe sections are aligned as shown in Figure 7.11.
- Pull carefully to separate the pieces of pipe.

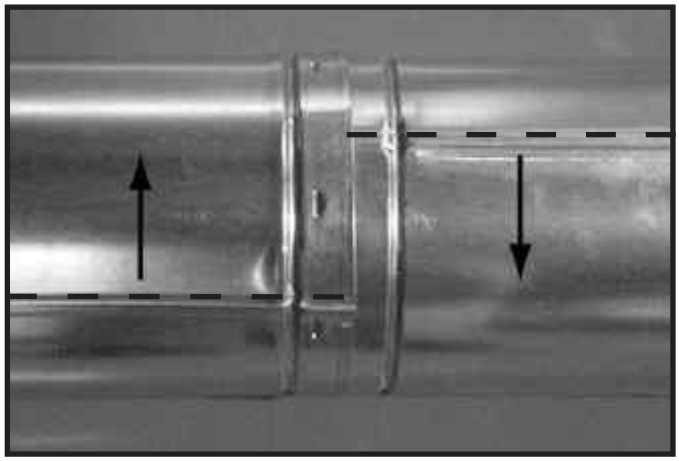

Figure 7.10 Rotate Seams for Disassembly

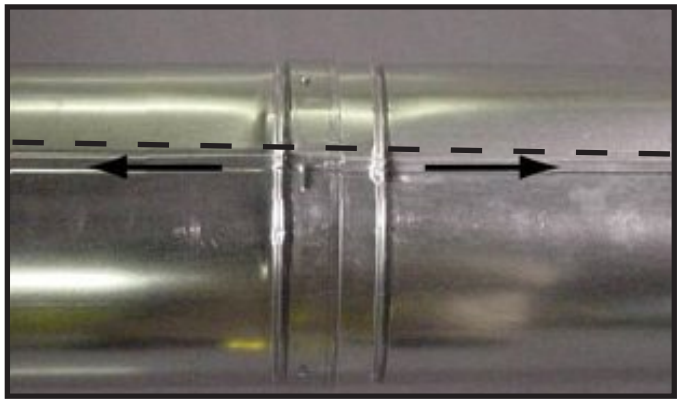

Figure 7.11 Align and Disassemble Vent Sections

F. Vertical Termination Requirements

Install Metal Roof Flashing

- See minimum vent heights for various pitched roofs (Figure 7.12) to determine the length of pipe to extend through the roof.
- Slide the roof flashing over the pipe sections extending through the roof as shown in Figure 7.13.

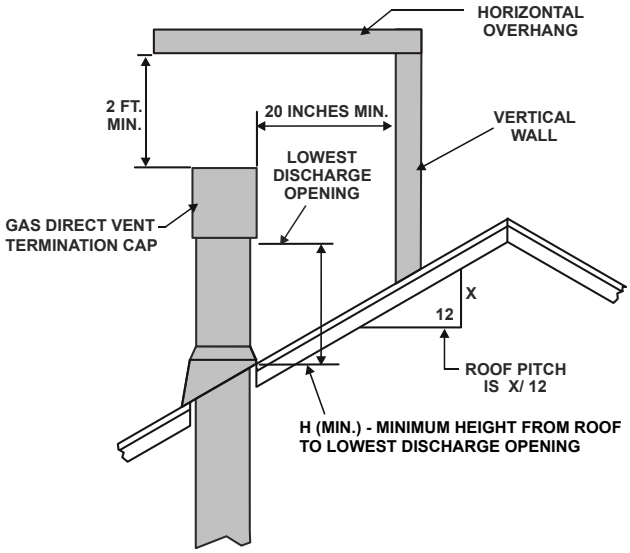

Roof Pitch	H (Min.) Ft.
Flat to 6/12	1.0*
Over 6/12 to 7/12	1.25*
Over 7/12 to 8/12	1.5*
Over 8/12 to 9/12	2.0*
Over 9/12 to 10/12	2.5*
Over 10/12 to 11/12	3.25
Over 11/12 to 12/12	4.0
Over 12/12 to 14/12	5.0
Over 14/12 to 16/12	6.0
Over 16/12 to 18/12	7.0
Over 18/12 to 20/12	7.5
Over 20/12 to 21/12	8.0

* H minimum may vary depending on regional snowfall. Refer to local codes.

Figure 7.12 Minimum Height From Roof To Lowest Discharge Opening

NOTICE: *Failure to properly caulk the roof flashing and pipe seams could permit entry of water.*

- Caulk the gap between the roof flashing and the outside diameter of the pipe.
- Caulk the perimeter of the flashing where it contacts the roof surface. See Figure 7.13.
- Caulk the overlap seam of any exposed pipe sections that are located above the roof line.

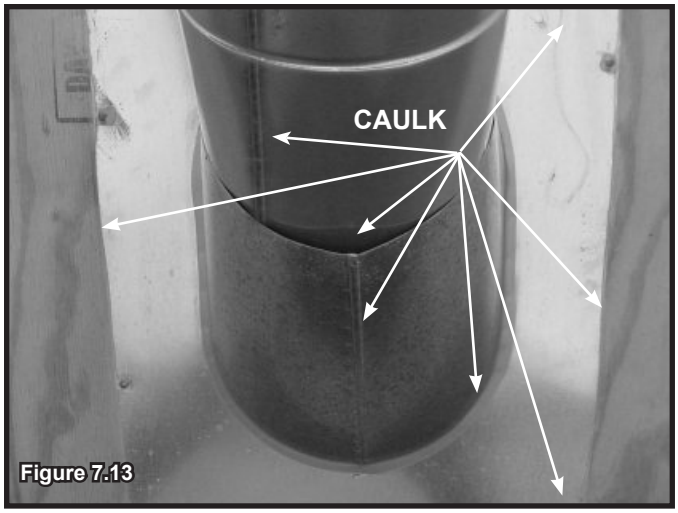

Figure 7.13

Assemble and Install Storm Collar

CAUTION! Risk of Cuts, Abrasions or Flying Debris. *Wear protective gloves and safety glasses during installation. Sheet metal edges are sharp.*

- Slide the storm collar onto the exposed pipe section and align brackets.
- Insert a bolt (provided) through the brackets and install nut. Do not completely tighten.

Figure 7.14 insert Bolt into Brackets

- Slide the assembled storm collar down the pipe section until it rests on the roof flashing (see Figure 7.14).
- Tighten nut and make sure the collar is tight against the pipe section.
- Caulk around the top of the storm collar. See Figure 7.15.

Install Vertical Termination Cap

- Attach the vertical termination cap by sliding the inner collar of the cap into the inner flue of the pipe section while placing the outer collar of the cap over the outer flue of the pipe section.
- Secure the cap by driving three self-tapping screws (supplied) through the pilot holes in the outer collar of the cap into the outer flue of the pipe (see Figure 7.15).

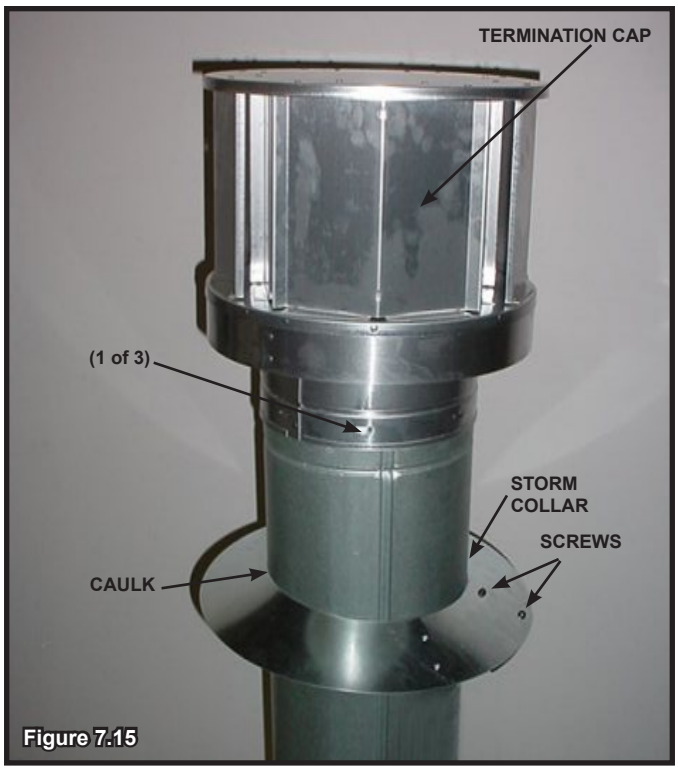

Figure 7.15

G. Horizontal Termination Requirements

Heat Shield Requirements for Horizontal Termination

WARNING! Risk of Fire! *To prevent overheating and fire, heat shields must extend through the entire wall thickness.*

- ***DO NOT*** *remove the heat shields attached to the wall shield firestop and the horizontal termination cap (shown in Figure 7.16).*
- *Heat shields must overlap 1-1/2 in. (38 mm) minimum.*

There are two sections of the heat shield. One section is factory-attached to the wall shield firestop. The other section is factory-attached to the cap. See Figure 7.16.

If the wall thickness does not allow the required 1-1/2 in. (38 mm) heat shield overlap when installed, an extended heat shield must be used.

- If the wall thickness is less than 4 in./102 mm (DVP) or 4-3/8 in./ 111 mm (SLP), the heat shields on the cap and wall shield firestop must be trimmed. A minimum 1-1/2 in. (38 mm) overlap MUST be maintained.
- Use an extended heat shield if the finished wall thickness is greater than 7-1/4 in. (184 mm).
- The extended heat shield may need to be cut to length maintaining sufficient length for a 1-1/2 in. (38 mm) overlap between heat shields.
- Attach the extended heat shield to either of the existing heat shields using the screws supplied with the extended heat shield. Refer to vent components diagrams in the back of this manual.
- Rest the small leg on the extended heat shield on top of the pipe section to properly space it from the pipe section.

Important Notice: Heat shields may <u>not</u> be field constructed.

Install Horizontal Termination Cap (DVP and SLP Pipe)

WARNING! Risk of Fire! *The telescoping flue section of the termination cap MUST be used when connecting vent.*

- *1-1/2 (38 mm) minimum overlap of flue telescoping section is required.*

Failure to maintain overlap could cause overheating and fire.

- Vent termination must not be recessed in the wall. Siding may be brought to the edge of the cap base.
- Flash and seal as appropriate for siding material at outside edges of cap.
- When installing a horizontal termination cap, follow the cap location guidelines as prescribed by current **ANSI Z223.1** and **CAN/CGA-B149** installation codes and refer to Section 4 of this manual.

CAUTION! Risk of Burns! *Local codes may require installation of a cap shield to prevent anything or anyone from touching the hot cap.*

NOTICE: *For certain exposures which require superior resistance to wind-driven rain penetration, a flashing kit and HRC caps are available. When penetrating a brick wall, a brick extension kit is available for framing the brick.*

Note: When using termination caps with factory-supplied heat shield attached, no additional wall shield firestop is required on the exterior side of a combustible wall.

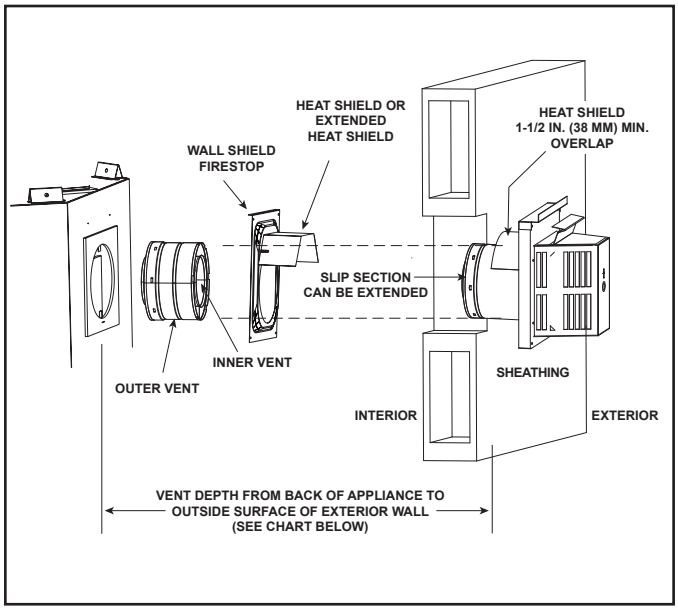

Figure 7.16 Venting Through the Wall

Termination Cap Specification Chart (depth without using additional pipe sections)

	DVP-TRAPK1 Top Vent Depth	DVP-TRAP1 Rear Vent Depth	DVP-TRAPK2 Top Vent Depth	DVP-TRAP2 Rear Vent Depth
SL Series	N/A	3-1/8 in. to 5 in.	N/A	5-1/2 in. to 9-1/2 in.
	DVP-HPC1 Top Vent Depth	DVP-HPC1 Rear Vent Depth	DVP-HPC2 Top Vent Depth	DVP-HPC2 Rear Vent Depth
	N/A	3-1/8 in. to 5-1/4 in.	N/A	5-1/4 in. to 9-3/8 in.

DVP-TRAP1 can adjust 1-1/2 in. (3-1/8 to 4-5/8)

DVP-TRAP2 can adjust 4 in. (5-3/8 to 9-3/8)

DVP-HPC1 can adjust 2-1/8 in. (4-1/4 to 6-3/8)

DVP-HPC2 can adjust 4-1/8 in. (6-3/8 to 10-1/2)

8 Electrical Information

A. General Information

WARNING! Risk of Shock or Explosion! DO NOT *wire 110-120 VAC to the valve or to the appliance wall switch. Incorrect wiring will damage controls.*

NOTICE: *This appliance must be electrically wired and grounded in accordance with local codes or, in the absence of local codes, with* **National Electric Code ANSI/NFPA 70-latest edition** *or the* **Canadian Electric Code CSA C22.1.**

- Wire the appliance junction box to unswitched 110-120 VAC. This is required for proper operation of the appliance.
- A 110-120 VAC circuit for this product must be protected with ground-fault circuit-interrupter protection, in compliance with the applicable electrical codes, when it is installed in locations such as in bathrooms or near sinks.
- Low voltage and 110-120 VAC voltage cannot be shared within the same wall box.

Junction Box Installation

If the box is being wired from the **INSIDE** of the appliance:

- Remove the screw attaching the junction box/receptacle to the outer shell, rotate the junction box inward to disengage it from the outer shell. See Figure 8.1.
- Pull the electrical wires from outside the appliance through the opening into the valve compartment and secure wires with a Romex connector. See Figure 8.1.
- Make all necessary wire connections to the junction box/receptacle and reattach the junction box/receptacle to the outer shell.

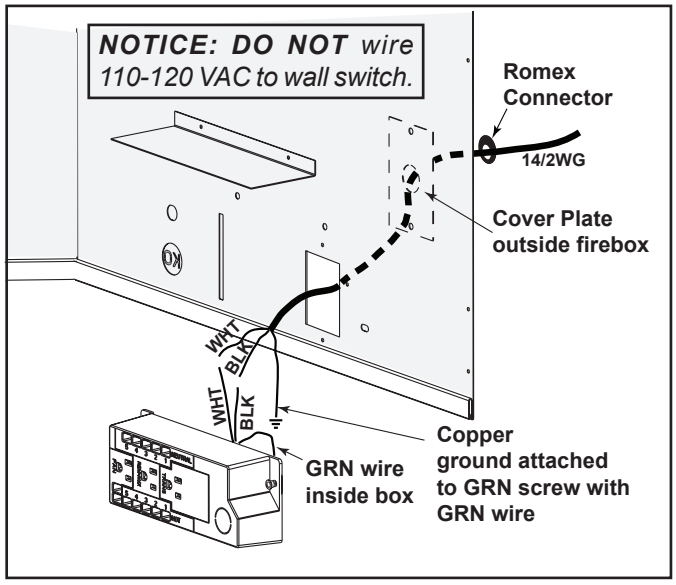

Figure 8.1 Junction Box Detail

Accessories Requirements

- This appliance may be used with a wall switch, wall mounted thermostat and/or a remote control.

Wiring for optional Hearth & Home Technologies approved accessories should be done now to avoid reconstruction. Follow instructions that come with those accessories.

Electrical Service and Repair

WARNING! Risk of Shock! *Label all wires prior to disconnection when servicing controls. Wiring errors could cause improper and dangerous operation. Verify proper operation after servicing.*

WARNING! Risk of Shock! *Replace damaged wire with type 105º C rated wire. Wire must have high temperature insulation.*

B. Wiring Requirements

Intellifire Ignition System Wiring

- Wire the appliance junction box to 110-120 VAC for proper operation of the appliance.

WARNING! Risk of Shock or Explosion! DO NOT *wire IPI controlled appliance junction box to a switched circuit. Incorrect wiring will override IPI safety lockout.*

- Refer to Figure 8.2, Intellifire Pilot Ignition (IPI) Wiring Diagram.
- This appliance is equipped with an Intellifire control valve which operates on a 3 volt system.
- Plug the 3-volt AC transformer into the appliance junction box to supply power to the unit OR install two D cell batteries (not included) into the battery pack before use.

NOTICE: *Batteries should only be used as a power source in the event of an emergency power outage. Batteries should not be used as a primary long-term power source. Battery polarity must be correct when installing batteries. When using batteries as a power source, the 3-volt transformer must be unplugged from the receptacle.*

Do not store batteries in the battery pack when the appliance is powered by the 3-volt transformer connected to permanent electrical service

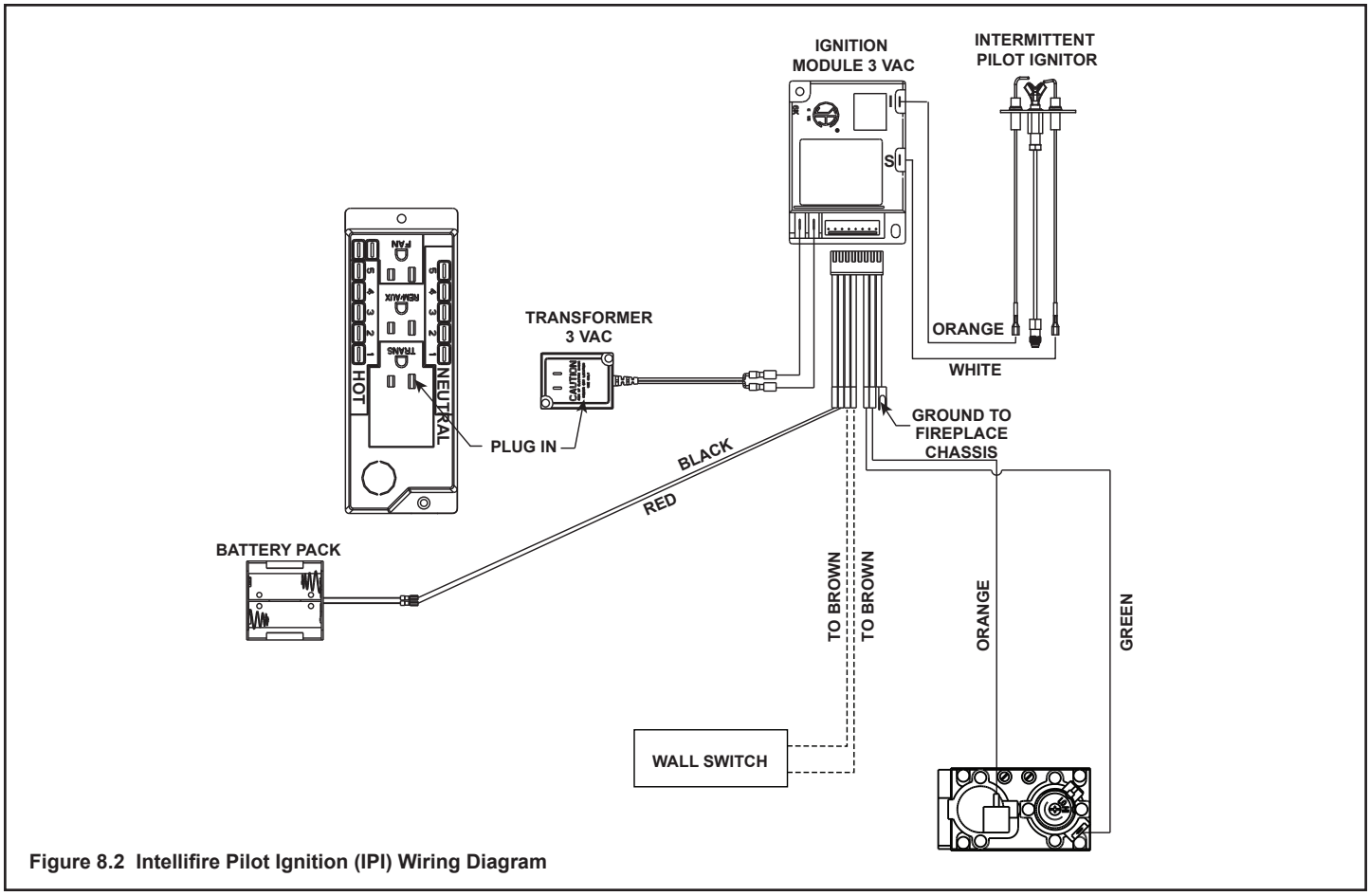

Figure 8.2 Intellifire Pilot Ignition (IPI) Wiring Diagram

Wall Switch Installation for Fan (Optional)

If the box is being wired to a wall mounted switch for use with a fan. See Figure 8.3.

- The power supply for the appliance must be brought into a switch box.
- The power can then be supplied from the switch box to the appliance using a minimum of 14-3 with ground wire.
- At the switch box connect the black (hot) wire and red (switch leg) wire to the wall switch as shown.
- At the appliance connect the black (hot), white (neutral) and green (ground) wires to the junction box as shown.
- Add a 1/4 in. insulated female connector to the red (switch leg) wire, route it through the knockout in the face of the junction box, and connect to the top fan switch connector (1/4 in. male) as shown.

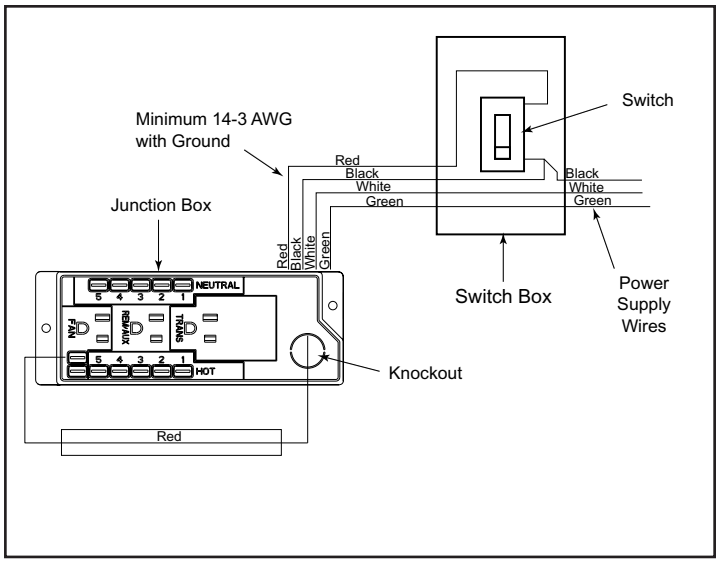

Figure 8.3 Junction Box Wired to Wall Switch or BC10

Temperature Sensor Wiring for Fan (Optional)

If the fan will not be installed for operation with a wall switch, the temperature sensor will need to be installed. See Figure 8.4 for location of the temperature sensor and fan control.

- The power supply for the appliance must be brought into the junction box.
- Install rheostat in location as seen in Figure 8.4.
- Connect temperature sensor switch wire and rheostat switch wires to junction box as shown in Figure 8.5.

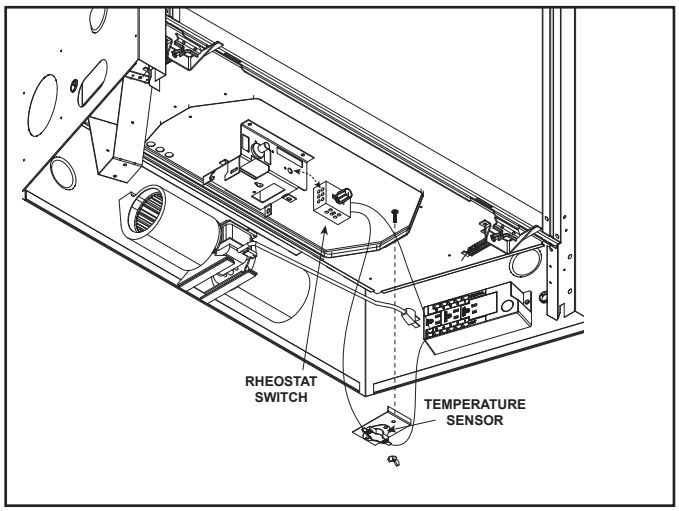

Figure 8.4 Fan Wiring with Rheostat

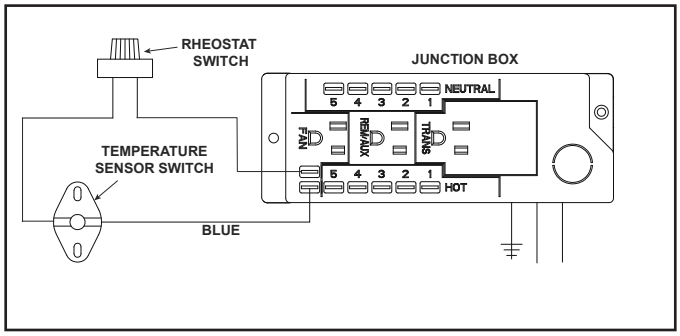

Figure 8.5 Detail of Fan Wiring with Rheostat

9 Gas Information

A. Fuel Conversion

- Make sure the appliance is compatible with available gas types.
- Conversions must be made by a qualified service technician using Hearth & Home Technologies specified and approved parts.

B. Gas Pressure

- Optimum appliance performance requires proper input pressures.
- Gas line sizing requirements will be determined in ANSI Z223.1 National Fuel Gas Code in the USA and CAN/CGA B149 in Canada.
- Pressure requirements are:

Gas Pressure	Natural Gas	Propane
Minimum inlet pressure	5.0 in. w.c.	11.0 in. w.c.
Maximum inlet pressure	10.0 in. w.c.	13.0 in. w.c.
Manifold pressure	3.5 in. w.c.	10.0 in. w.c.

WARNING! Risk of Fire or Explosion! *High pressure will damage valve. Low pressure could cause explosion.*

- Verify inlet pressures. Verify minimum pressures when other household gas appliances are operating.
- Install regulator upstream of valve if line pressure is greater than 1/2 psig.

⚠ WARNING

Fire Risk.

Explosion Hazard.

High pressure will damage valve.

- Disconnect gas supply piping BEFORE pressure testing gas line at test pressures above 1/2 psig.
- Close the manual shutoff valve BEFORE pressure testing gas line at test pressures equal to or less than 1/2 psig.

Note: Have the gas supply line installed in accordance with local codes, if any. If not, follow ANSI 223.1. Installation should be done by a qualified installer approved and/or licensed as required by the locality. (In the Commonwealth of Massachusetts installation must be performed by a licensed plumber or gas fitter).

Note: A listed (and Commonwealth of Massachusetts approved) 1/2 in. (13 mm) T-handle manual shut-off valve and flexible gas connector are connected to the 1/2 in. (13 mm) control valve inlet.

- **If substituting for these components, please consult local codes for compliance.**

C. Gas Connection

- Refer to Reference Section 3 for location of gas line access in appliance.
- Gas line may be run through knockout(s) provided.
- The gap between supply piping and gas access hole may be caulked with caulk with a minimum of 300ºF continuous exposure rating or stuffed with non-combustible, unfaced insulation to prevent cold air infiltration.
- Ensure that gas line does not come in contact with outer wrap of the appliance. Follow local codes.
- Pipe incoming gas line into valve compartment.
- Connect incoming gas line to the 1/2 in. (13 mm) connection on manual shutoff valve.

WARNING! Risk of Fire or Explosion! *Support control when attaching pipe to prevent bending gas line.*

- A small amount of air will be in the gas supply lines.

WARNING! Risk of Fire or Explosion! *Gas build-up during line purge could ignite.*

- *Purge should be performed by qualified service technician.*
- *Ensure adequate ventilation.*
- *Ensure there are no ignition sources such as sparks or open flames.*

Light the appliance. It will take a short time for air to purge from lines. When purging is complete the appliance will light and operate normally.

WARNING! Risk of Fire, Explosion or Asphyxiation! *Check all fittings and connections with a non-corrosive commercially available leak-check solution.* ***DO NOT*** *use open flame. Fittings and connections could have loosened during shipping and handling.*

WARNING! Risk of Fire! DO NOT *change valve settings. This valve has been preset at the factory.*

D. High Altitude Installations

NOTICE: *If the heating value of the gas has been reduced, these rules do not apply. Check with your local gas utility or authorities having jurisdiction.*

When installing above 2000 feet elevation:

- In the USA: Reduce input rate 4% for each 1000 feet above 2000 feet.
- In CANADA: Input ratings are certified without a reduction of input rate for elevations up to 4500 feet (1370 m)above sea level. Please consult provincial and/or local authorities having jurisdiction for installations at elevations above 4500 feet (1370 m).

Check with your local gas utility to determine proper orifice size.

E. Air Shutter Setting

Air shutter settings should be adjusted by a qualified service technician at the time of installation. The air shutter is set at the factory for minimum vertical vent run. Adjust air shutter for longer vertical runs.

By sliding the air shutter to the right, you will be opening the air shutter. To adjust loosen the wing nut. Care should be taken when adjusting the air shutter so as not to cause the appliance to soot. If sooting occurs the air shutter will need to be opened by sliding the air shutter to the right. When finished, tighten the wing nut. See Figure 9.1.

NOTICE: *If sooting occurs, provide more air by opening the air shutter.*

Air Shutter Settings

Models	NG	LP
SL-5F	1/4 in.	1/2 in.
SL-7F	1/4 in.	1/2 in.

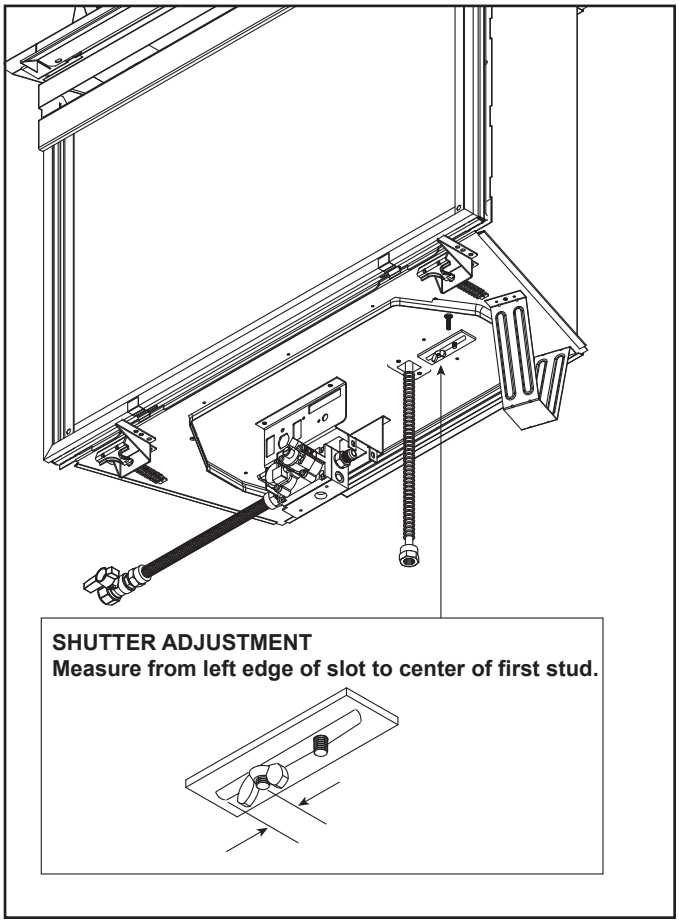

Figure 9.1 Air Shutter Adjustment

10 Finishing

A. Facing and Finishing

- Metal front faces may be covered with non-combustible materials only.
- Facing and/or finishing materials must not interfere with air flow through louvers, operation of louvers or doors, or access for service.
- Facing and/or finishing materials must never overhang into the glass opening.
- Observe all clearances when applying combustible materials.
- Seal joints between the finished wall and appliance top and sides using a 300 ºF minimum sealant. Refer to Figure 10.1.

WARNING! Risk of Fire! DO NOT *apply combustible materials beyond the minimum clearances. Comply with all minimum clearances to combustibles as specified in this manual. Overlapping materials could ignite and will interfere with proper operation of doors and louvers.*

NOTICE: *Surface temperatures around the appliance will become warm while the appliance is in operation. Ensure finishing materials used for all surfaces (floor, walls, mantels, etc.) will withstand temperatures up to 190ºF.*

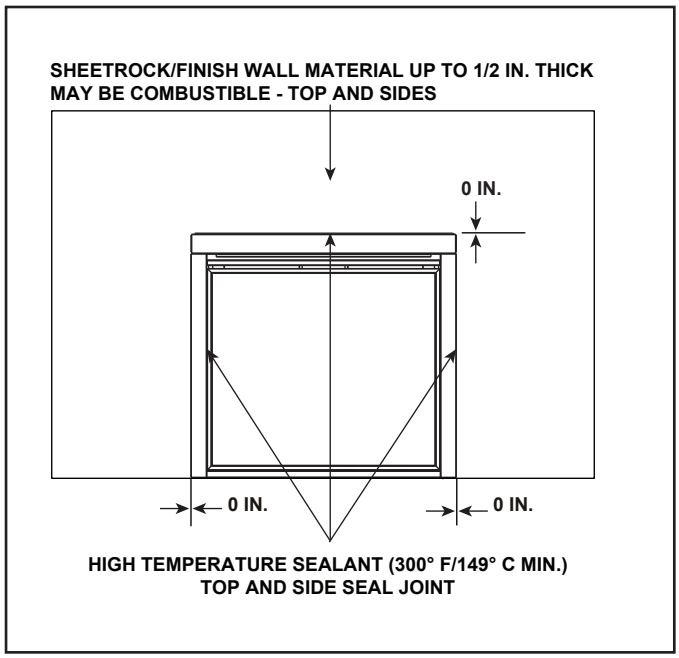

Figure 10.1 Noncombustible Facing Diagram

Non-combustible facing up to 4 inches thick may be used. Stop finishing material flush with fireplace surround opening. See Figure 10.2.

WARNING! Risk of Overheating and Fire! *Non-combustible material must not exceed 4 inches in thickness.*

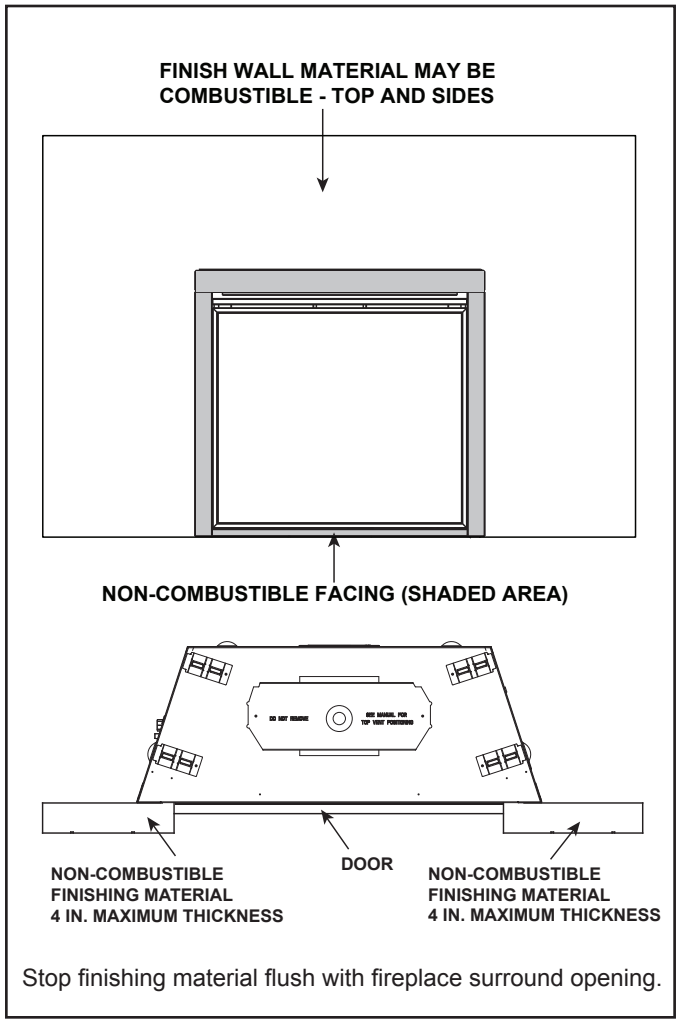

Figure 10.2 Clean Face Decorative Front Finishing Details

B. Mantel and Wall Projections

WARNING! Risk of Fire! *Comply with all minimum clearances as specified. Framing closer than the minimums listed must be constructed entirely of non-combustible materials (i.e., steel studs, concrete board, etc.).*

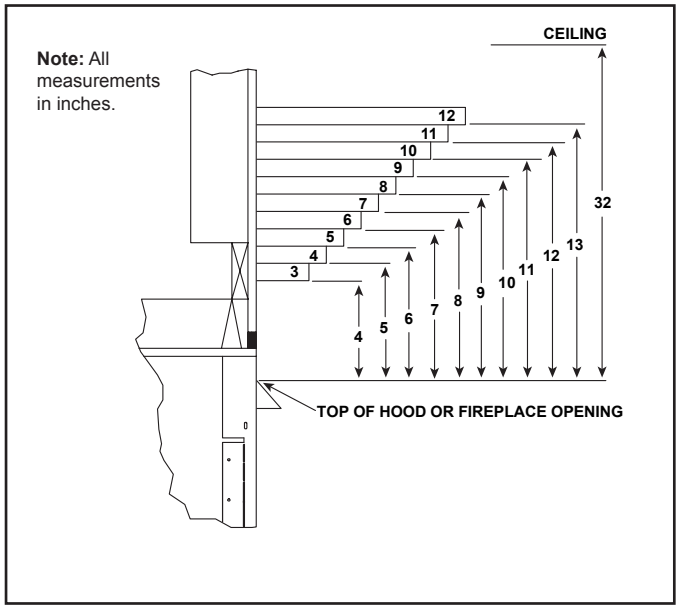

Figure 10.3 Clearances To Combustible Mantels Or Other Combustibles Above Appliance

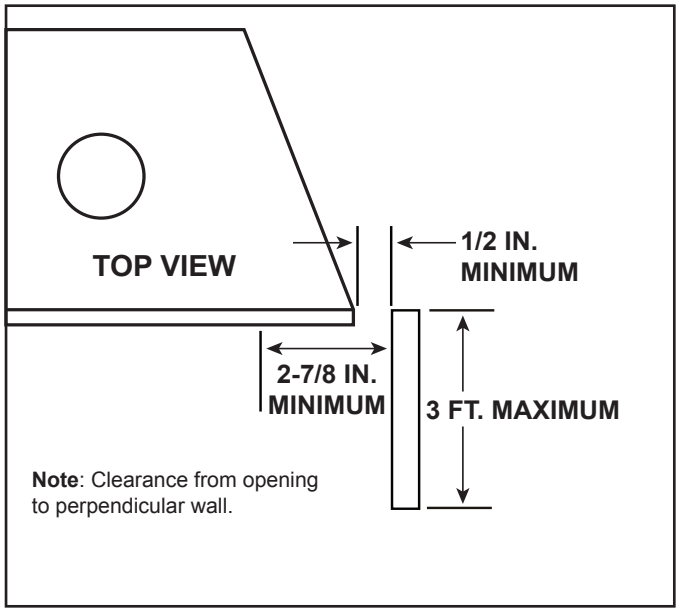

Figure 10.4 Non-Combustible Mantel Leg or Wall Projections (Acceptable on both sides of opening)

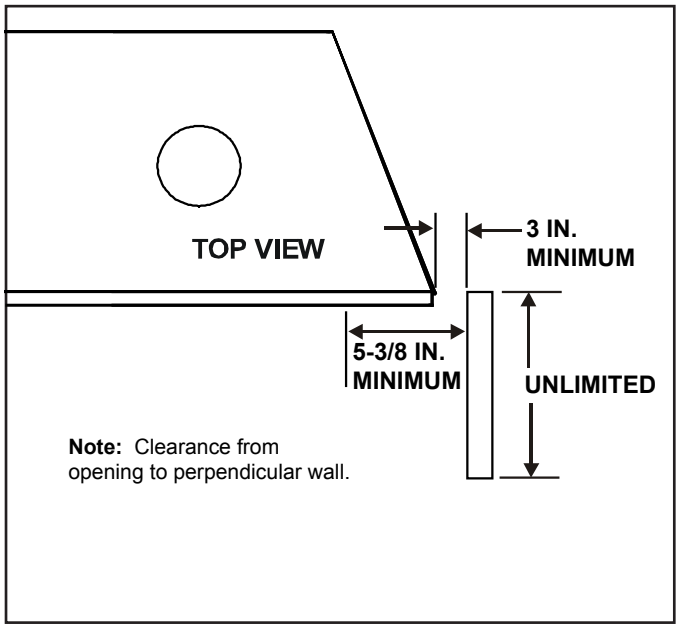

Figure 10.5 Combustible Mantel Leg or Wall Projections (Acceptable on both sides of opening)

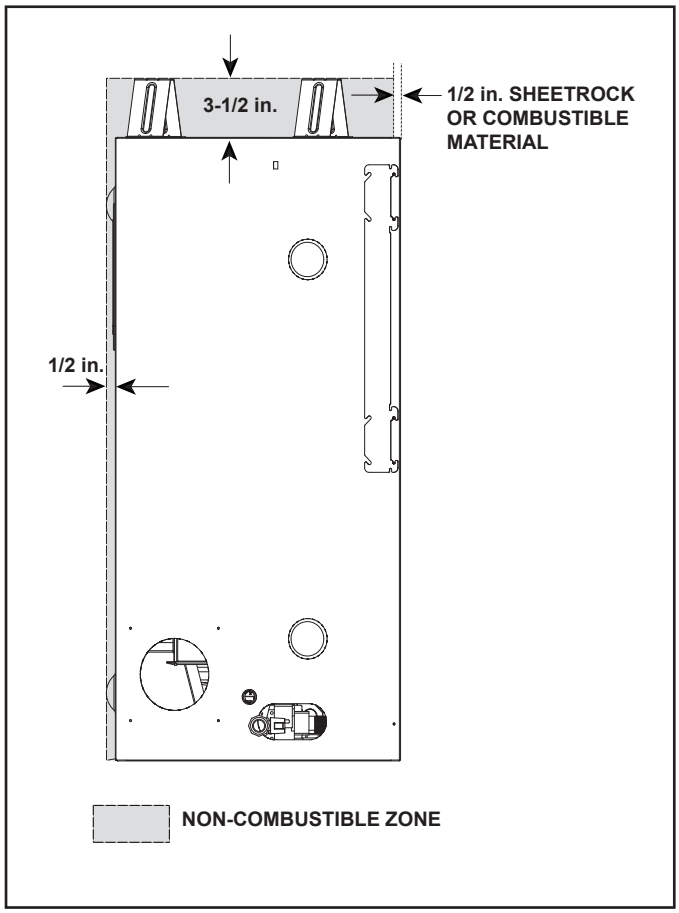

Figure 10.6 Non-Combustible Zone

C. Install Decorative Front/Hood

WARNING! Risk of Fire! *Install ONLY doors or fronts approved by Hearth & Home Technologies. Unapproved doors or fronts could cause fireplace to overheat.*

This fireplace has been supplied with an integral barrier to prevent direct contact with the fixed glass panel. DO NOT operate the fireplace with the barrier removed.

Contact your dealer or Hearth & Home Technologies if the barrier is not present or help is needed to properly install one.

1. Remove decorative front by lifting up and away from appliance.
2. Install four shoulder bolts as shown in figure 10.7.
3. Hang decorative front onto shoulder bolts.
4. Install hood on appliance by inserting into the two hood clips. See Figure 10.7.

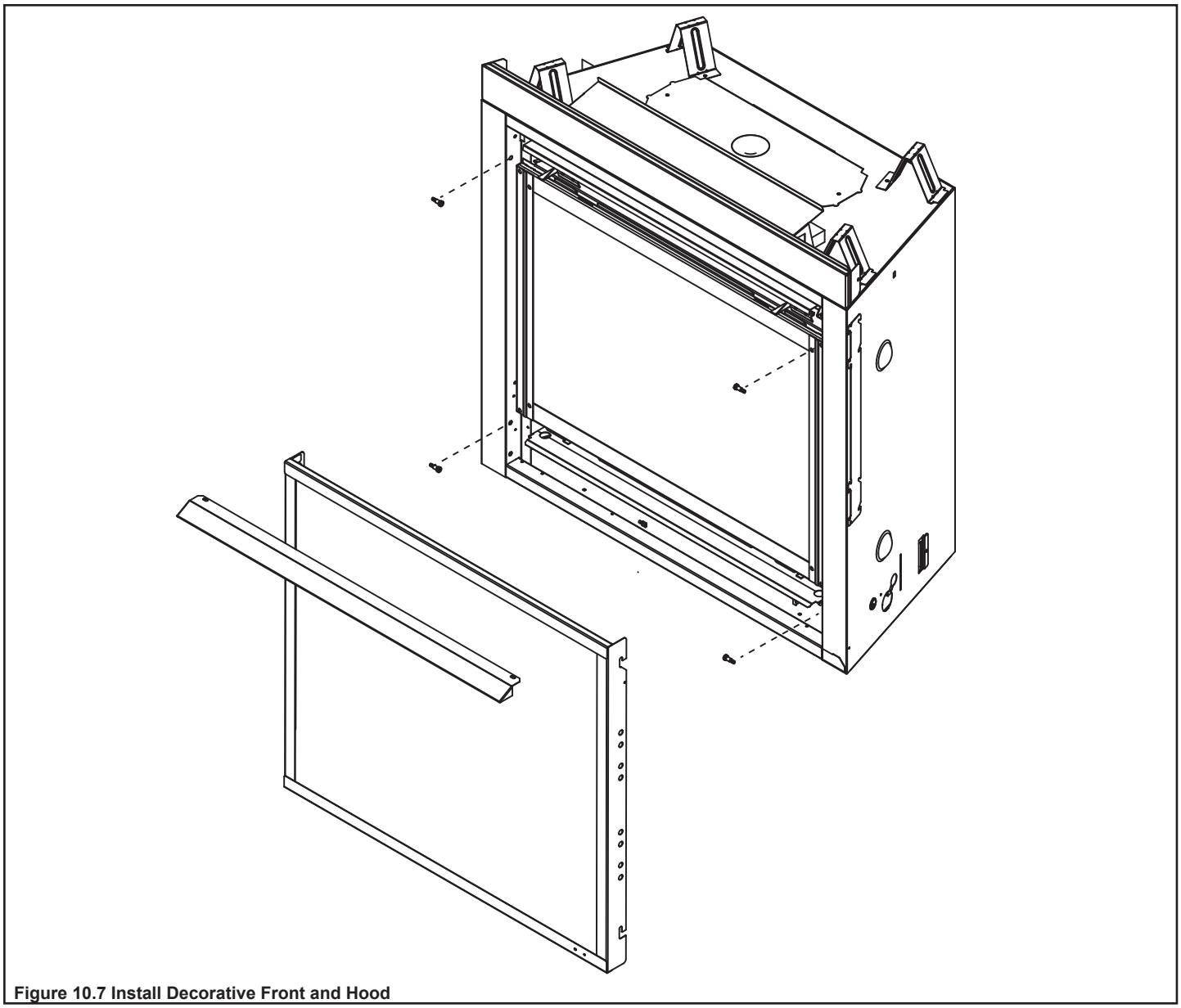

Figure 10.7 Install Decorative Front and Hood

11 Appliance Setup

A. Remove Fixed Glass Assembly

WARNING! Risk of Asphyxiation! *Handle fixed glass assembly with care. Inspect the gasket to ensure it is undamaged and inspect the glass for cracks, chips or scratches.*

- ***DO NOT*** *strike, slam or scratch glass.*
- ***DO NOT*** *operate fireplace with glass removed, cracked, broken or scratched.*
- *Replace as a complete assembly.*

Removing Fixed Glass Assembly

- Pull the four glass assembly latches out of the groove on the glass frame. Remove glass door from the appliance. See Figure 11.1.

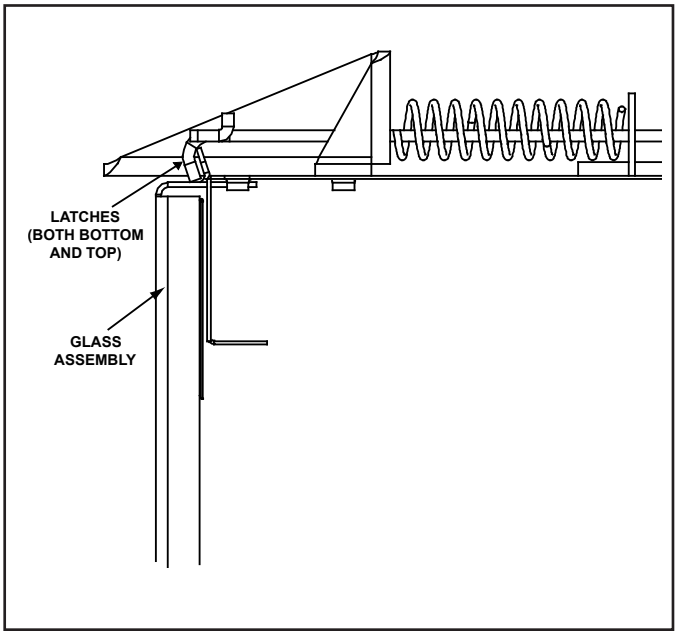

Figure 11.1 Fixed Glass Assembly

B. Remove the Shipping Materials

Remove shipping materials from inside or underneath the firebox.

- The splatter guard is a piece of corrugated material used to protect the appliance during the installation process before finishing work on the whole hearth is complete. Splatter guards may be factory installed or accompany the decorative front, depending on the fireplace model. Splatter guards must be removed before appliance is fired.

WARNING! Risk of Fire! *Close the ball valve before installing the splatter guard to prevent accidental lighting. Remove the splatter guard before lighting the appliance.*

C. Clean the Appliance

Clean/vacuum any sawdust that may have accumulated inside the firebox or underneath in the control cavity.

D. Install the Log Assembly and Lava Rock

➔ **Note:** If using a glass media or stone kit, skip this section. Refer to the instructions included with the kit.

Log Set Assembly: LOGS-550F
Models: SL-550F, SL-550F-LP, SL-5F

LOG PLACEMENT INSTRUCTIONS

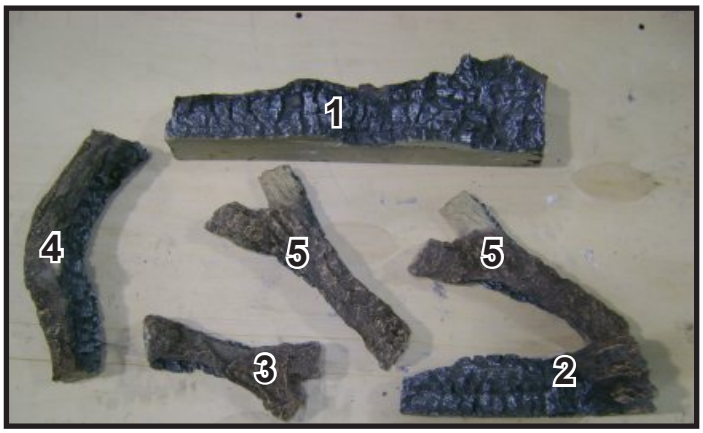

Figure 1.

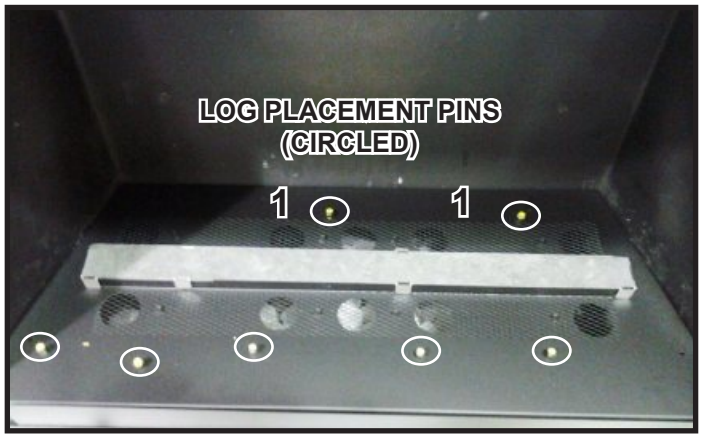

Figure 2. Location of Log Placement Pins and Corresponding Log #'s

CAUTION: Logs are fragile, handle with care. **Log #1 (2297-700)**: Place Log #1 into position by holding it upright and placing it onto the pins on the back of the basepan. See Figure 3. Log #1 will sit upright as shown in Figure 4.

Figure 3. Log #1 - Bottom View

Figure 4. Log #1 in Position

Log #2 (2033-709): Log #2 has holes on the bottom side that will be used for positioning them in the firebox. See Figure 5. Place Log #2 on the pins in the front of the firebox as shown in Figure 6.

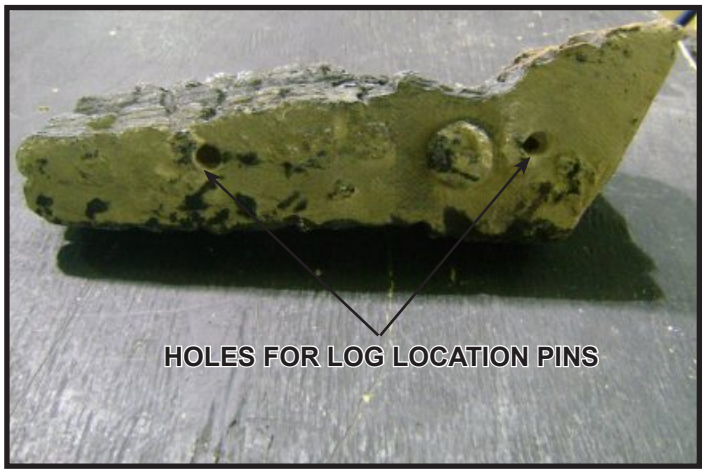

Figure 5. Log #2 - Bottom View

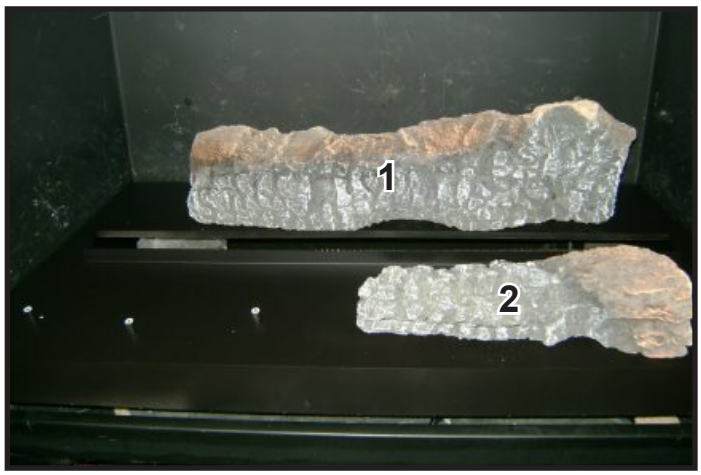

Figure 6. Log #2 in Position

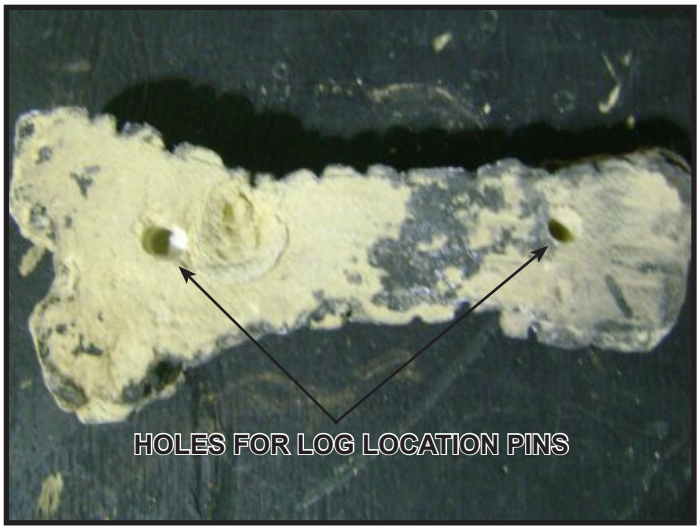

Figure 7. Log #3 Bottom View

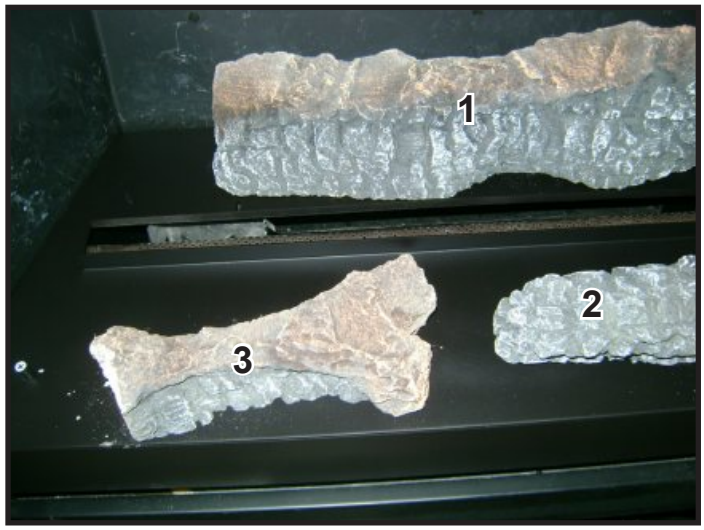

Figure 8. Log #3 in Position

Log #3 (2033-708): Log #3 also has holes on the bottom side that will be used for positioning it in the firebox. See Figure 7. Place the two holes on the bottom of Log #3 onto the pins on the left side of the basepan as shown in Figure 8.

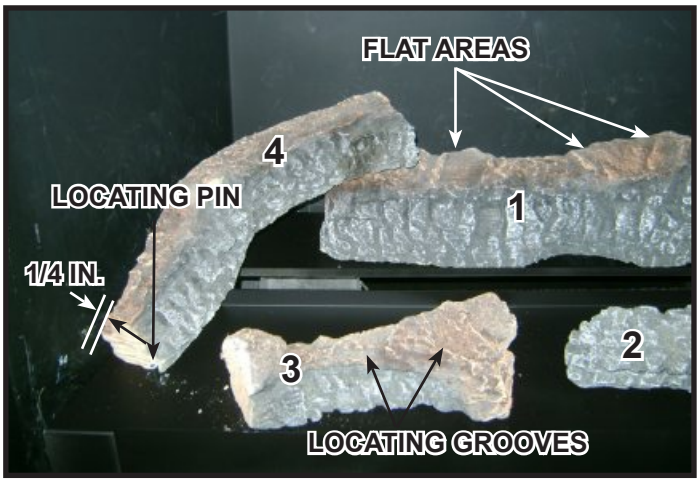

Figure 9. Log #4 in Position

Figure 10. Lava Rock and Rock Jig

Log #4 (2033-721): Place Log #4 on the left side of the firebox as shown in Figure 9. Position one end on the flat spot on the top of Log #1 and place the other end against the locating pin on the basepan. There should be a gap of approximately 1/4 inch between the bottom left edge of the log and the firebox.

LAVA ROCK (4021-297): Place lava rock on the base pan and around the logs as shown in Figure 10. Use the supplied rock jig to prevent the rock from going in between the base pan and burner. **DO NOT** allow any lava rock to fall in the slot and onto the burner.

Note: When applying Lava Rock or Media in areas of the base pan that is covered by **mesh**, apply only **one layer** of Lava Rock or Media.

⚠ WARNING

RISK OF EXPLOSION!

- Place lava rock according to instructions.
- Do NOT place lava rock on burner top.
- Do NOT place lava rock in a position that they may fall into area in front of pilot.
- Use ONLY Hearth & Home Technologies-approved optional media with this appliance.
- Do NOT use more than 3 pounds of lava rock per fireplace.

Improperly placed lava rock interferes with proper burner operation.

Delayed ignition may occur.

Remove the rock jig by removing the shipping screw on the back. Keep the rock jig and screw in the lower cavity of the appliance. It will be needed for future cleaning of the logs and lava rock or servicing of the appliance. Once the rock jig is removed, visually inspect the burner area to ensure that no lava rock is there. See Figure 11.

Figure 11. Rock Jig Removed

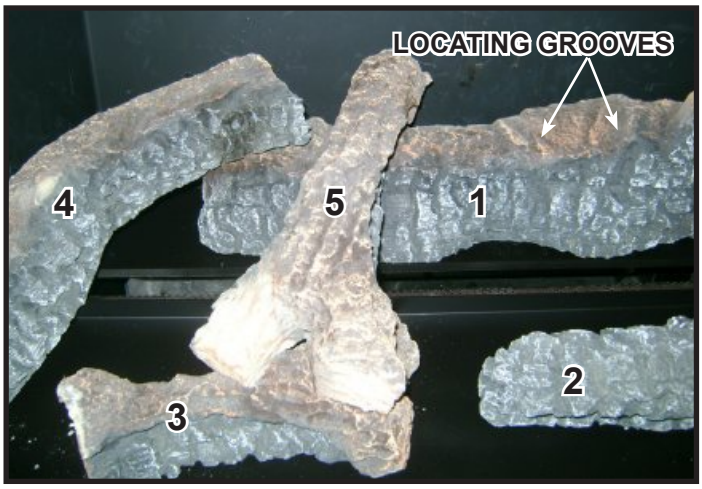

Figure 12. Log #5 (1st of 2)

Log #5 (2033-720): Log #5 is used twice in this log set. The left log is located by placing the "Y-Shaped" end on the locating grooves of Log #3 and setting the other end on the flat area of Log #1. See Figure 9 to reference locations of flat areas and grooves. Figure 12 shows the left side Log #5 in position. The right side Log #5 is located by placing the "Y-Shaped" end on the locating grooves of Log #1 and setting the other end on the right side log #2. See Figure 12 and Figure 13. The log should be approximately 1-1/2 inch from the end of Log #2. See Figure 14.

Figure 13. Log #5 (2nd of 2)

Figure 14. Log #5 Placement

Figure 15. Logs-550F Installed

2297-983E

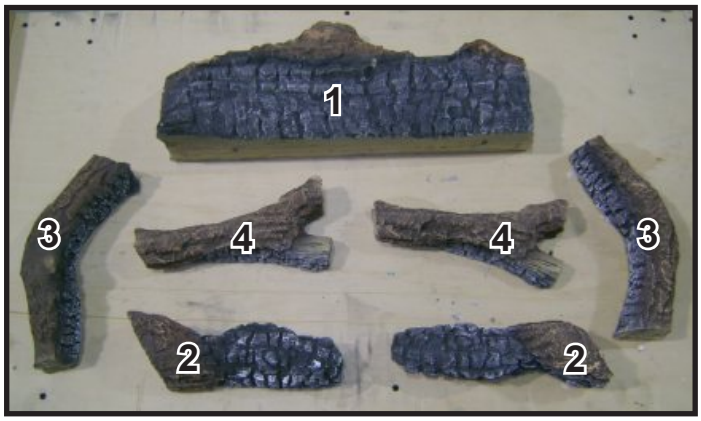

Figure 1.

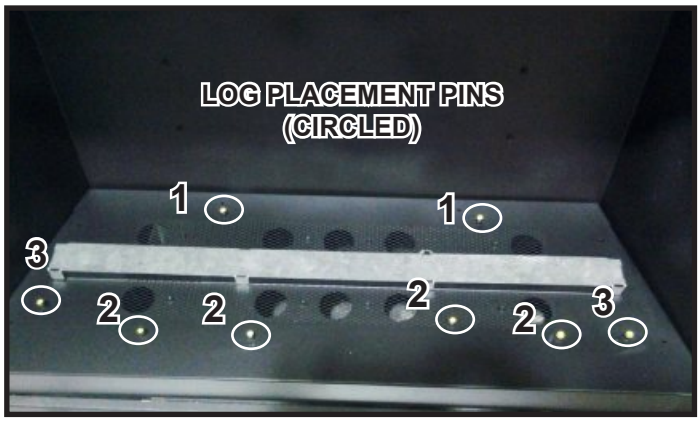

Figure 2. Location of Log Placement Pins and Corresponding Log #'s

CAUTION: Logs are fragile, handle with care. **Log #1 (2298-700)**: Place Log #1 into position by holding it upright and placing it onto the pins on the back of the basepan. See Figure 3. Log #1 will sit upright as shown in Figure 4.

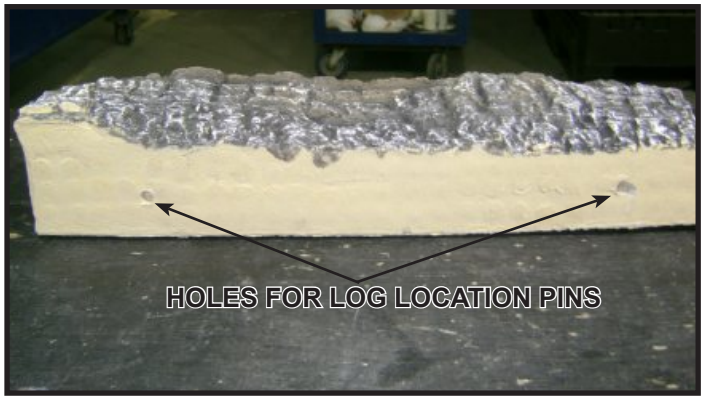

Figure 3. Log #1 - Bottom View

Figure 4. Log #1 in Position

Log #2 (2033-709): Log #2 is used twice in this log set. Log #2 also has holes on the bottom side that will be used for positioning them in the firebox. See Figure 5. Locate the two Log #2's and place them on the pins in the front of the firebox as shown in Figure 6 and Figure 7.

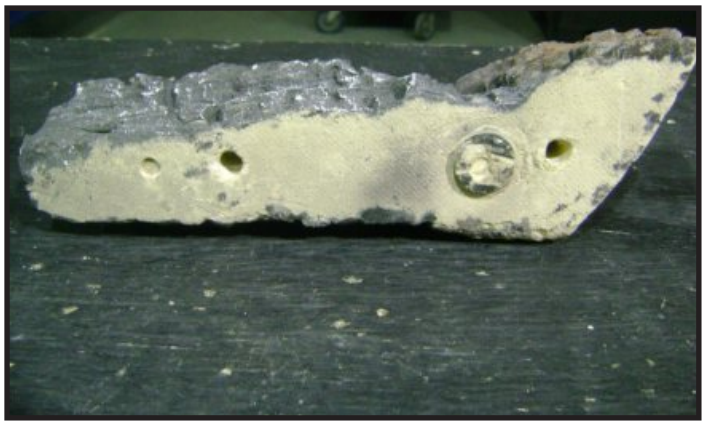

Figure 5. Log #2 - Bottom View

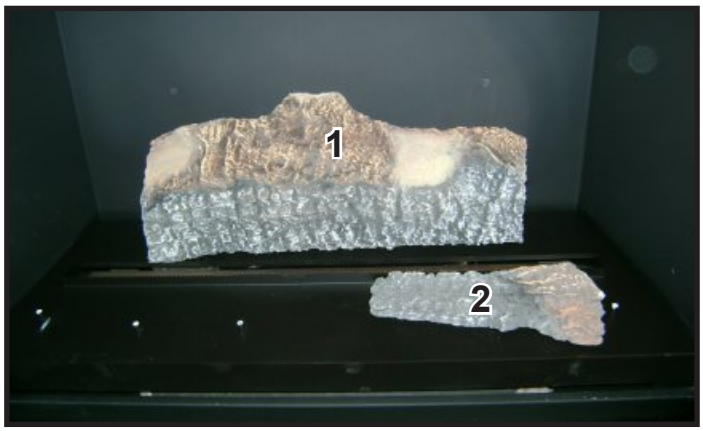

Figure 6. Log #2 - First of Two in Position

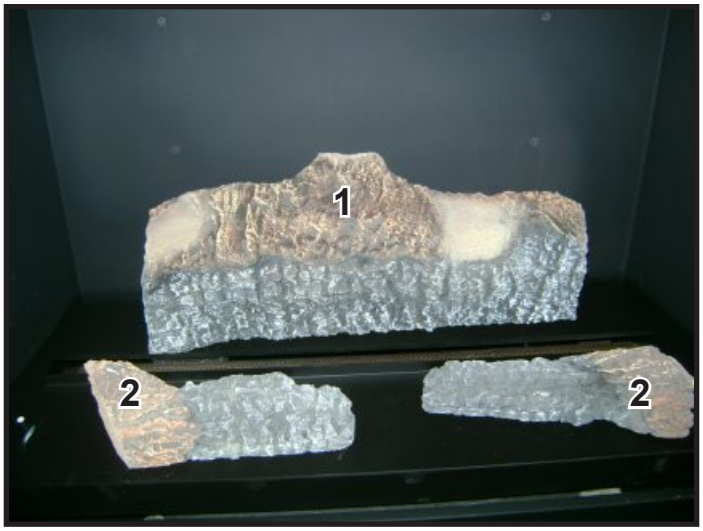

Figure 7. Log #2 (2nd of 2)

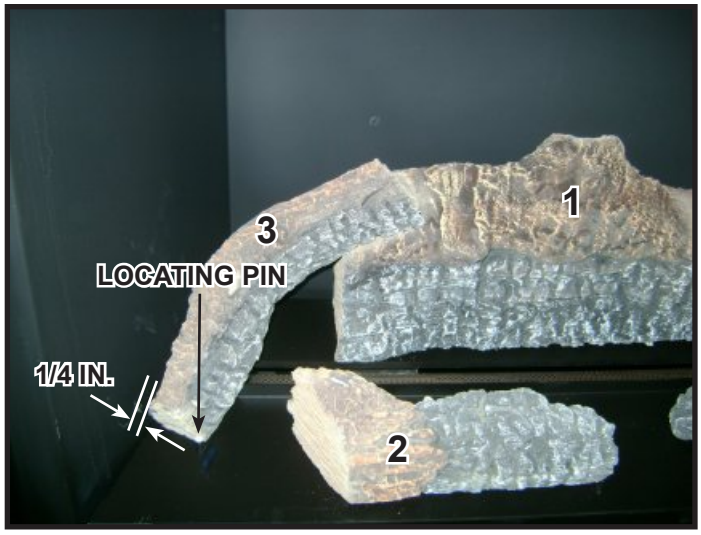

Figure 8. Log #3 (1st of 2)

Log #3 (2033-721): Log #3 is used twice in this log set. Place one of the #3 logs on the left side of the firebox as shown in Figure 8. Position one end on the flat spot on the top of Log #1 and place the other against the locating pin on the basepan. There should be approx. a 1/4 inch gap between the end of the log and the firebox.

The other Log #3 will be placed on the right in a position to mirror the first Log #3. Place it in position by placing one end on the flat of Log #1 and the other against the locating pin on the basepan. There should be approx. a 1/4 inch gap between the end of the log and the firebox. See Figure 9.

Figure 9. Log #3 (2nd of 2)

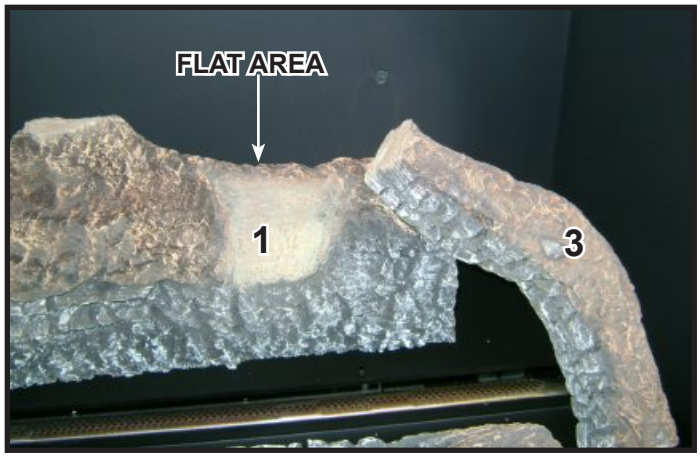

Figure 10. Flat Area of Log #1 Used for Log #4 Placement

LAVA ROCK (4021-297): Place lava rock on the base pan and around the logs as shown in Figure 11. Use the supplied burner tube slot cover to prevent the rock from going in between the base pan and burner. **DO NOT** allow any lava rock to fall in the slot and onto the burner.

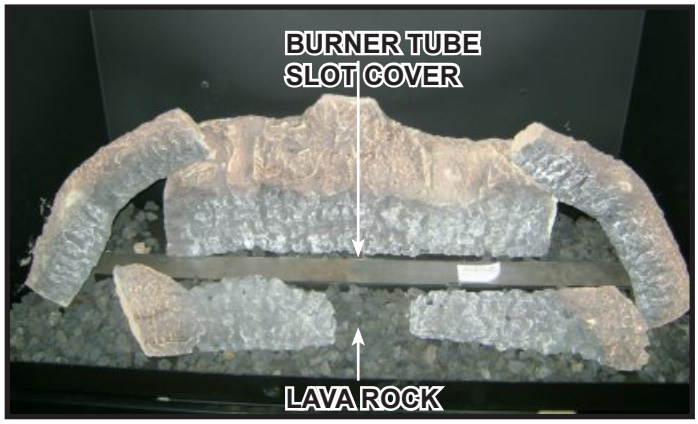

Figure 11. Lava Rock and Burner Tube Slot Cover

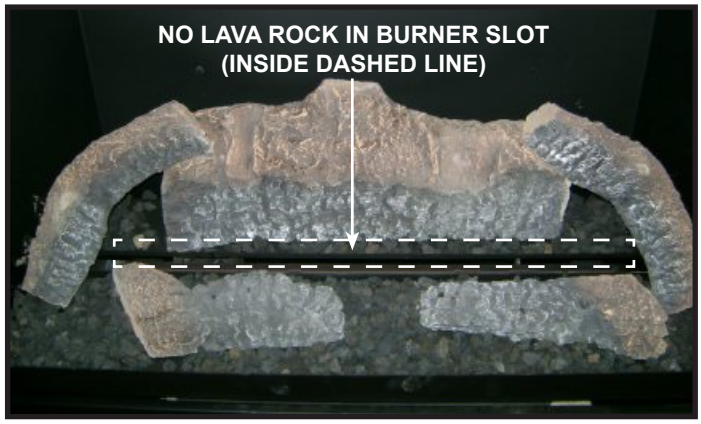

Figure 12. Burner Tube Slot Cover Removed

Note: When applying Lava Rock or Media in areas of the base pan that is covered by **mesh**, apply only **one layer** of Lava Rock or Media.

⚠ WARNING

RISK OF EXPLOSION!

- Place lava rock according to instructions.
- Do NOT place lava rock on burner top.
- Do NOT place lava rock in a position that they may fall into area in front of pilot.
- Use ONLY Hearth & Home Technologies-approved optional media with this appliance.
- Do NOT use more than 3 pounds of lava rock per fireplace.

Improperly placed lava rock interferes with proper burner operation.

Delayed ignition may occur.

Remove the burner tube slot cover by removing the shipping screw on the back. Keep the burner tube slot cover and screw in the lower cavity of the appliance. It will be needed for future cleaning of the logs and lava rock or servicing of the appliance. Once the burner tube slot cover is removed, visually inspect the burner area to ensure that no lava rock is present. See Figure 12.

Log #4 (2033-720): Log #4 is used twice in this log set. The right log is located by placing the "Y-Shaped" end on the flat area of Log #1 and setting the other end on the right side Log #2. See Figure 10 and Figure 13. The log should be approximately one inch from the end of the right side Log #2. See Figure 14.

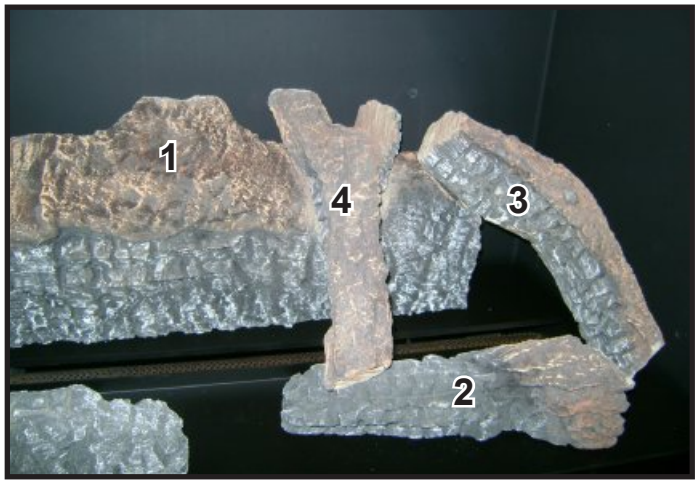

Figure 13. Log #4 (1st of 2)

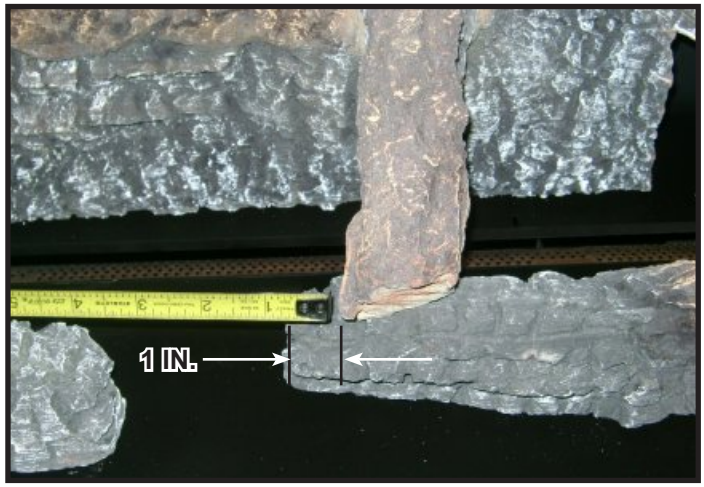

Figure 14. Log #4 (1st of 2)

Place the other Log #4 on the left side of the firebox by placing the thin end on the flat area of Log 1. See Figure 15. The "Y-Shaped" section will rest on the left side Log #2. See Figure 16. The left branch of the "Y" should rest where the "burned" area of the left Log #2 begins. See Figure 17.

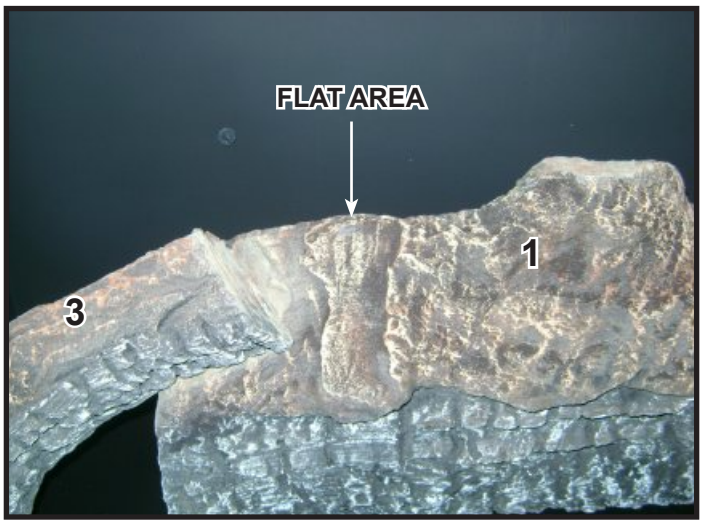

Figure 15. Log #4 (2nd of 2)

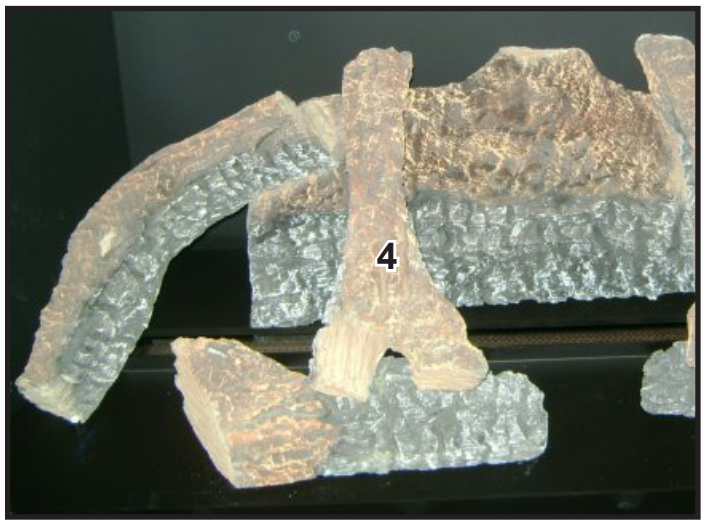

Figure 16. Log #4 (2nd of 2)

Figure 17. Log #4 (2nd of 2) Resting on Burned Area of Log #2.

Figure 18. Logs-750F Installed

2298-983D

E. Install Fixed Glass Assembly

WARNING! Risk of Asphyxiation! *Handle fixed glass assembly with care. Inspect the gasket to ensure it is undamaged and inspect the glass for cracks, chips or scratches.*

- ***DO NOT*** *strike, slam or scratch glass.*
- ***DO NOT*** *operate fireplace with glass removed, cracked, broken or scratched.*
- *Replace as a complete assembly.*
- Replace the glass door on the appliance. Pull out and latch the four glass assembly latches into the groove on the glass frame. See Figure 11.1.

F. Install Optional Trim Kits

- Install optional trim kits and/or surrounds using the instructions included with the accessory.
- Use non-combustible materials to cover the gap between the sheet rock and the appliance (when applicable to model).

12 Reference Materials

A. Vent Components Diagrams

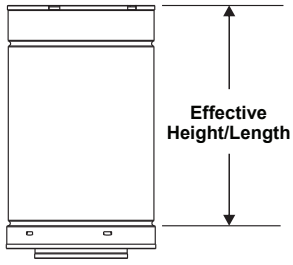

DVP Pipe (see chart)

Pipe	Effective Length	
	Inches	Millimeters
DVP4	4	102
DVP6	6	152
DVP12	12	305
DVP24	24	610
DVP36	36	914
DVP48	48	1219
DVP6A	3 to 6	76 to 152
DVP12A	3 to 12	76 to 305

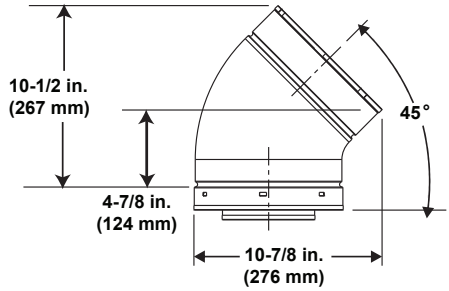

DVP45 (45º Elbow)

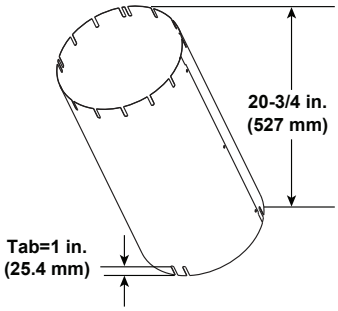

Finished Height: 19-3/4 in./502 mm
UNIV-AS2 (Attic Insulation Shield)

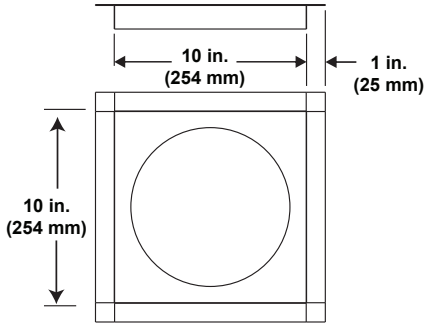

DVP-FS (Ceiling Firestop)

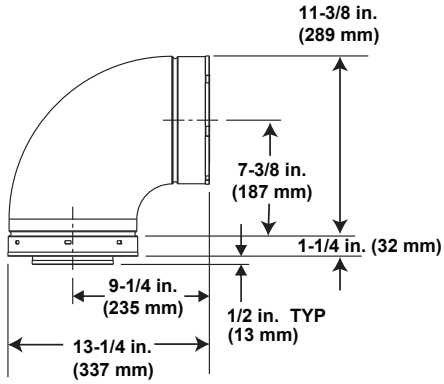

DVP90ST (90° Elbow)

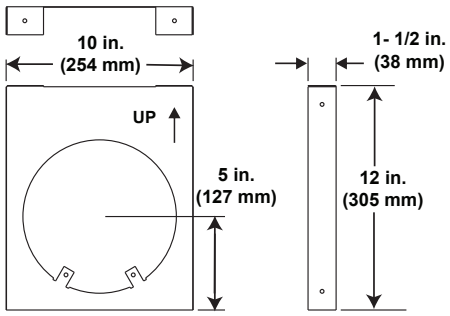

DVP-HVS (Vent Support)

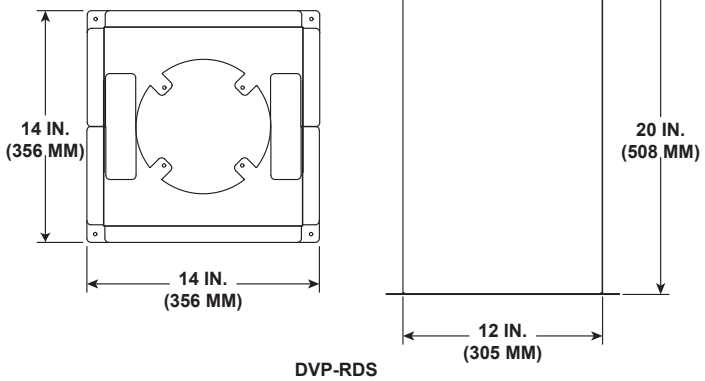

DVP-RDS
ROOF DECK INSULATION SHIELD

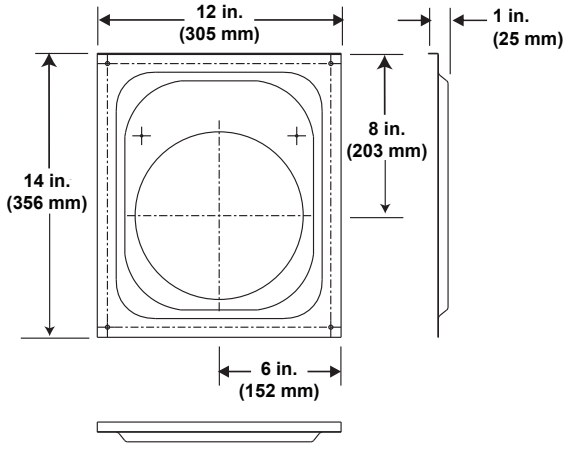

DVP-WS (Wall Shield Firestop)

Figure 12.1 DVP Vent Components

A. Vent Components Diagrams (*continued*)

Note: Heat shields MUST overlap by a minimum of 1-1/2 in. (38 mm). **The heat shield is designed to be used on a wall 4 in. to 7-1/4 in. (102 mm to 184 mm) thick.** If wall thickness is less than 4 in. (102 mm) the existing heat shields must be field trimmed. If wall thickness is greater than 7-1/4 in. (184 mm) a DVP-HSM-B will be required.

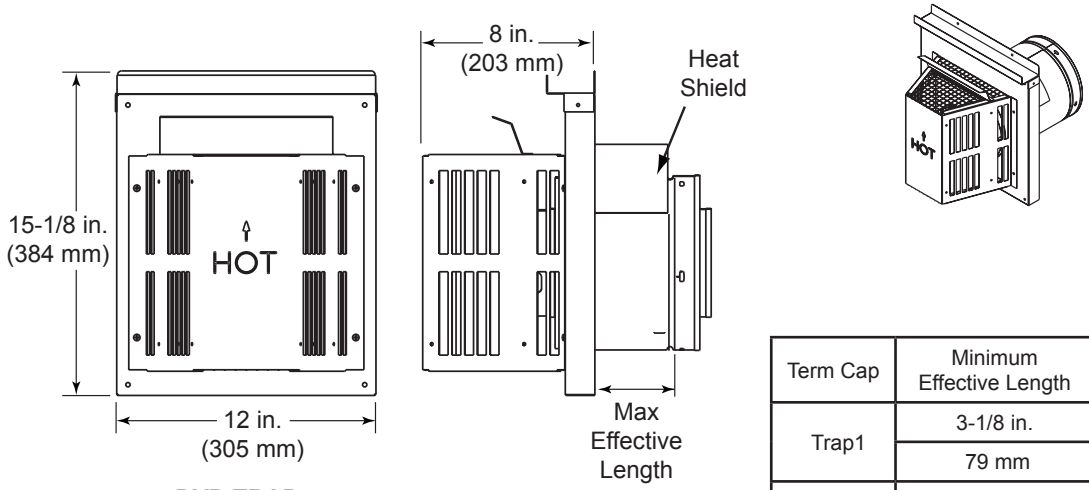

DVP-TRAP
Horizontal Termination Cap

Term Cap	Minimum Effective Length	Maximum Effective Length
Trap1	3-1/8 in.	4-5/8 in.
	79 mm	117 mm
Trap2	5-3/8 in.	9-3/8 in.
	137 mm	238 mm

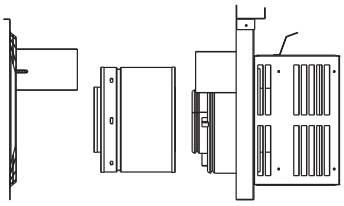

DVP-TRAP1

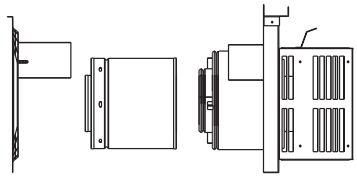

DVP-TRAP2

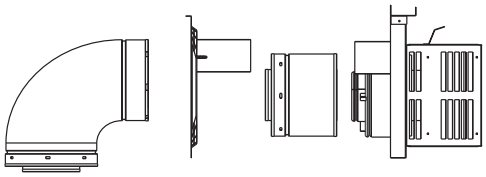

DVP-TRAPK1

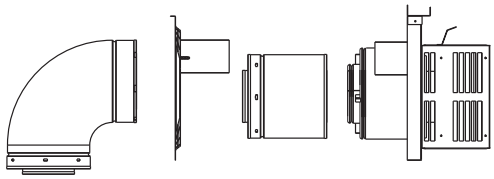

DVP-TRAPK2

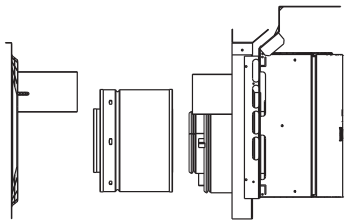

DVP-HPC1

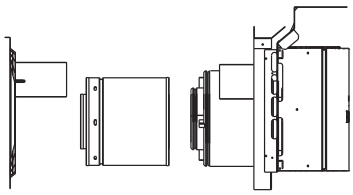

DVP-HPC2

Figure 12.2 DVP Vent Components

A. Vent Components Diagrams (*continued*)

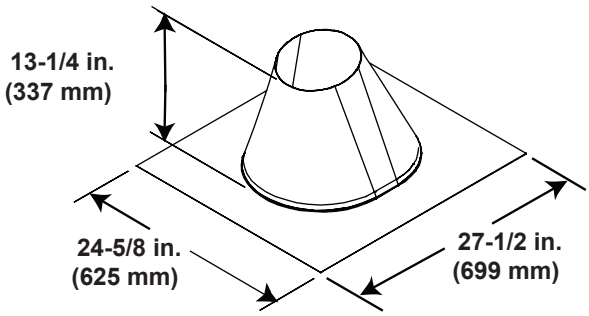

RF6
Roof Flashing Multi-pak

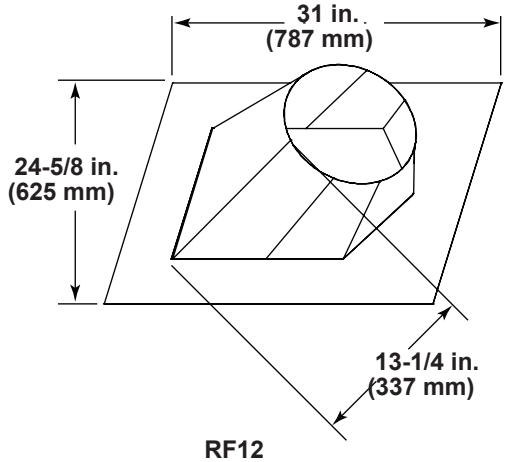

RF12
Roof Flashing Multi-pak

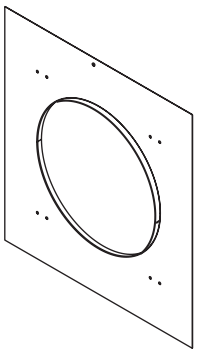

DVP-TRAPFL
Flashing

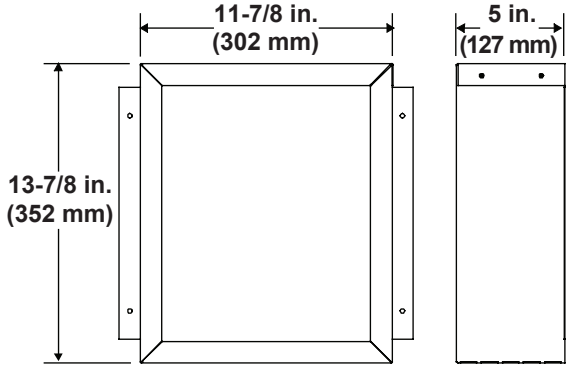

DVP-BEK2
DVP-HPC Cap Brick Extension

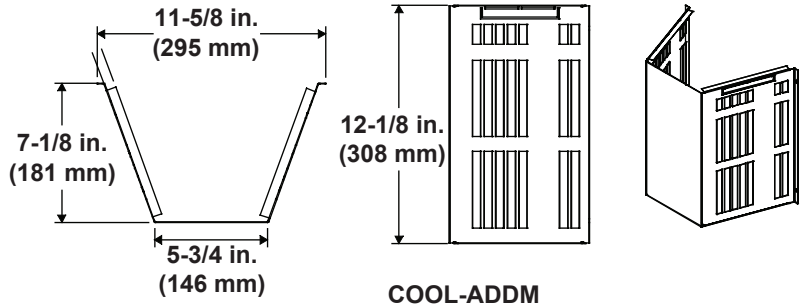

COOL-ADDM
Cap Shield

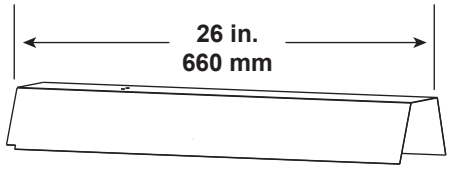

DVP-HSM-B
Extended Heat Shield

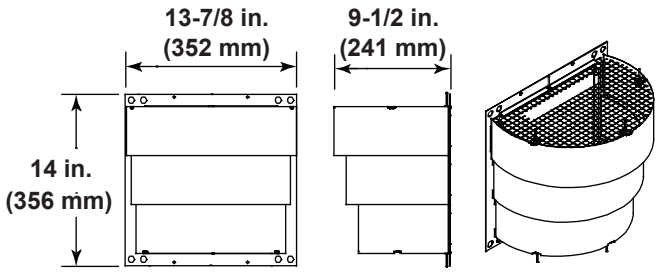

DRC-RADIUS
Cap Shield

Figure 12.3 DVP Vent Components

A. Vent Components Diagrams (*continued*)

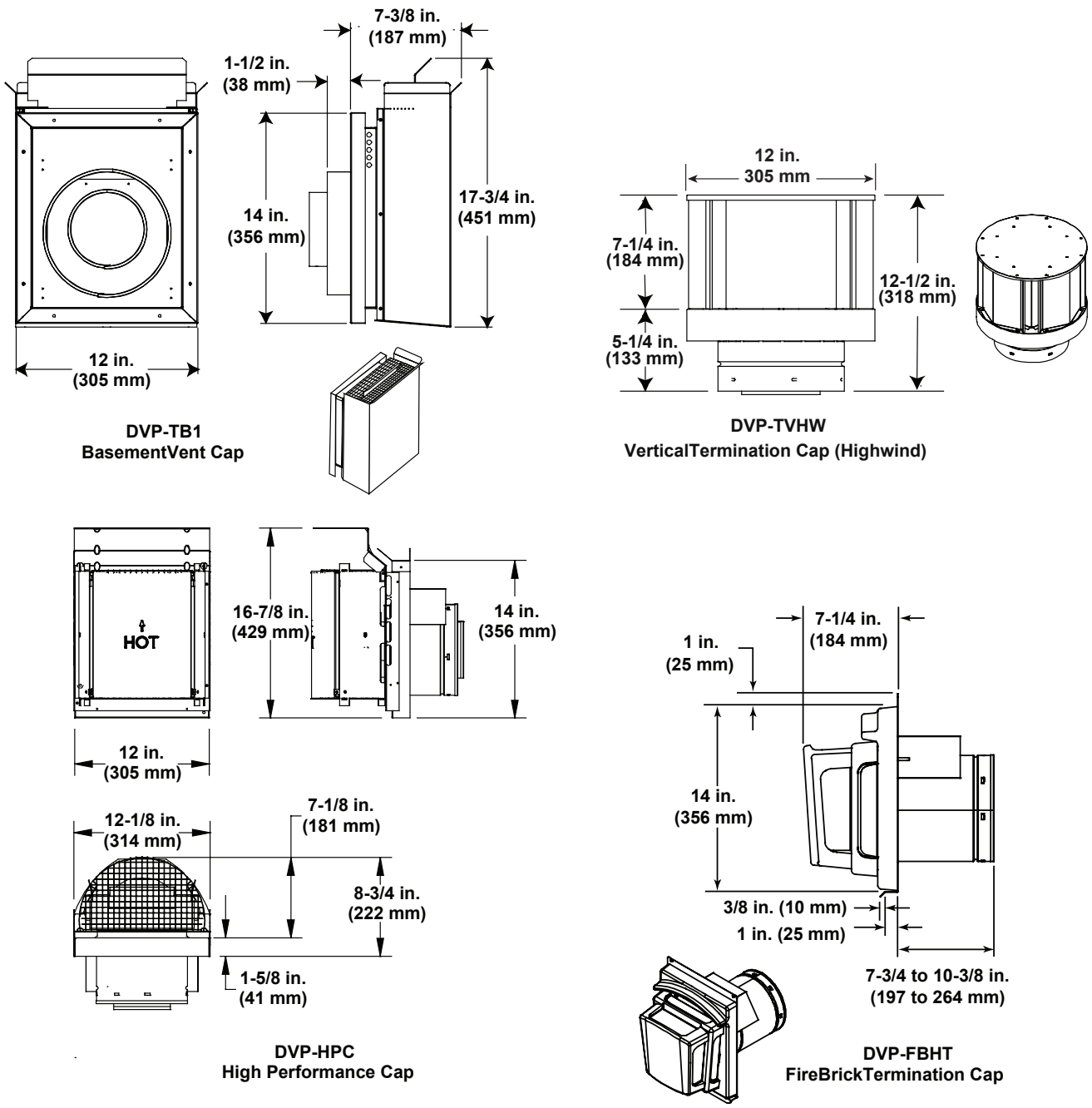

Figure 12.4 DVP Vent Components

A. Vent Components Diagrams *(continued)*

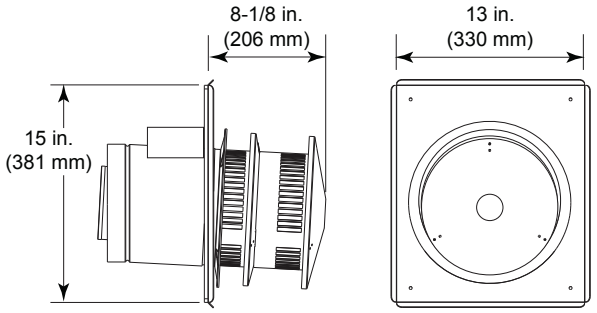

DVP-HRC-SS

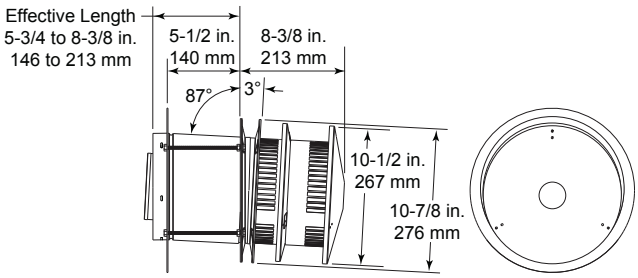

DVP-HRC-ZC-SS

⚠ WARNING

Fire Risk.

- When using SLP-HRC-SS termination cap on top vented fireplaces, a one foot minimum vertical vent section is required before installing first elbow.
- When using DVP-TB1 termination cap on top vented fireplaces, a three foot minimum vertical vent section is required before installing first elbow.

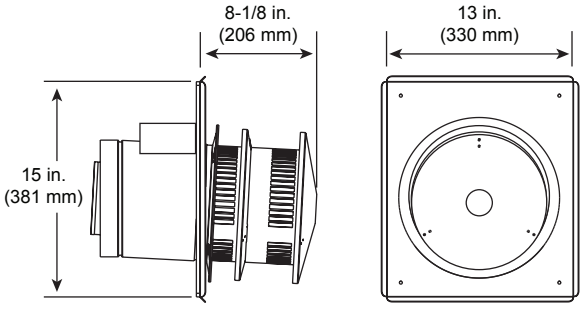

SLP-HRC-SS
HORIZONTAL TERMINATION CAP

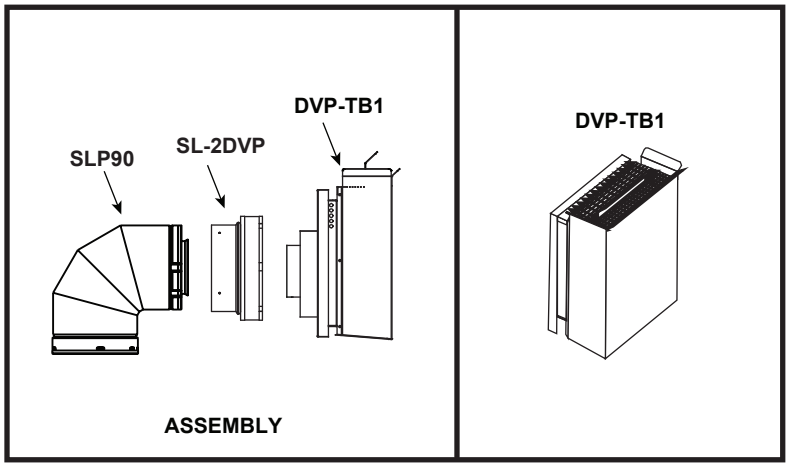

DVP-TB1
HORIZONTAL TERMINATION CAP

Figure 12.5 Vent Components

A. Vent Components Diagrams *(continued)*

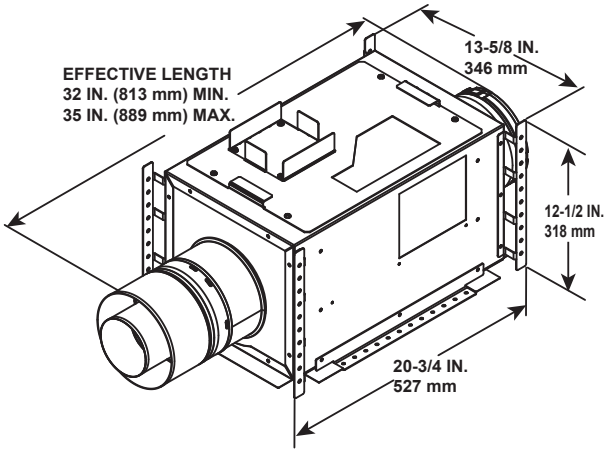

PVI-SLP-B
Power Vent Inline

Optional Wire Harness	
DESCRIPTION	**PART NUMBER**
10 FT PV Wire Harness	PVI-WH10
20 FT PV Wire Harness	PVI-WH20
40 FT PV Wire Harness	PVI-WH40
60 FT PV Wire Harness	PVI-WH60
80 FT PV Wire Harness	PVI-WH80
100 FT PV Wire Harness	PVI-WH100

Note: Wire harnesses required to power the PVI-SLP-B connect to the appliance and are ordered separately from PVI-SLP-B. Contact your dealer to order.

Note: The PVI-SLP-B requires a PV-IPI-CK be installed on this appliance. The PV-IPI-CK is ordered separately from the PVI-SLP-B. Contact your dealer to order.

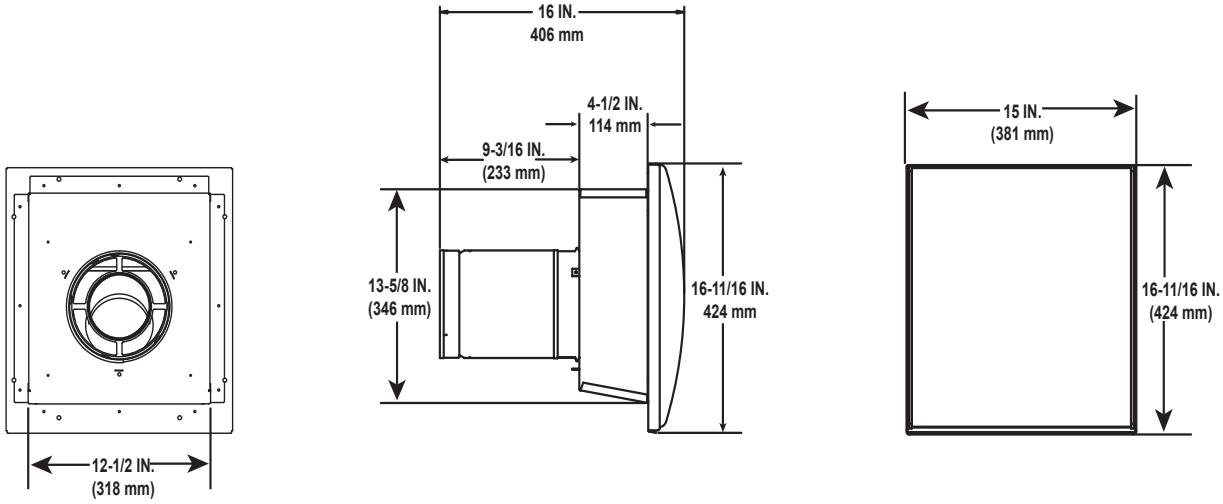

SLP-LPC
SLP Low Profile Cap
(Approved for use with PVI-SLP-B only)

Figure 12.6 PVI-SLP-B Vent Components

A. Vent Components Diagrams *(continued)*

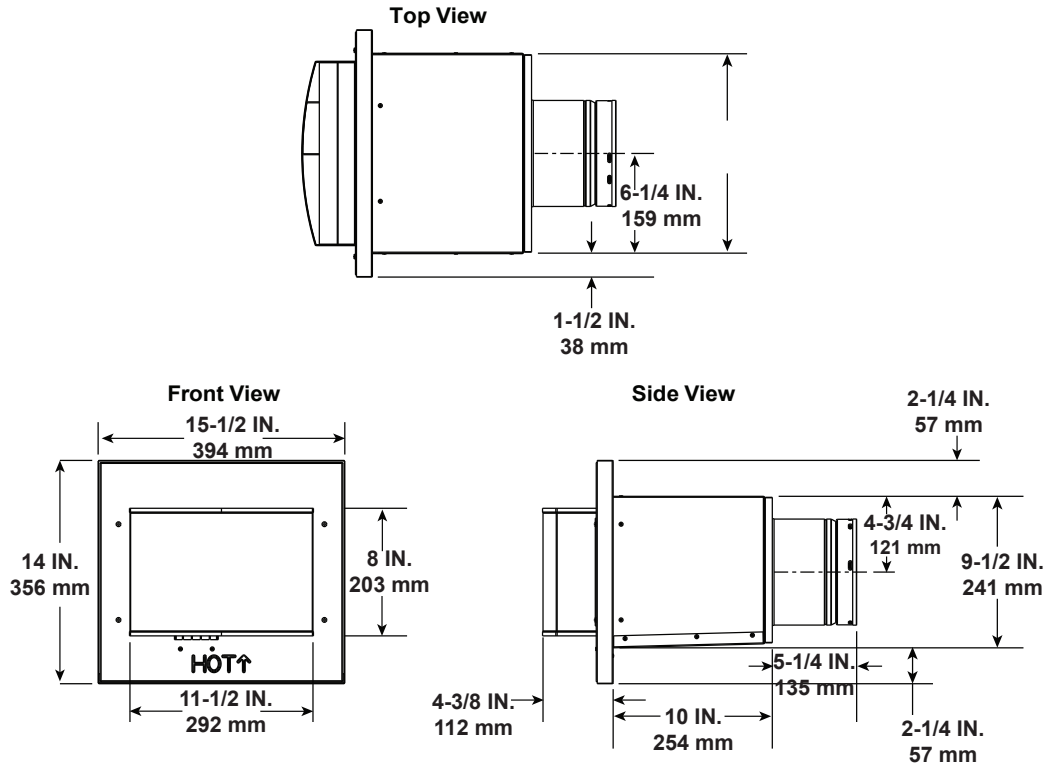

PVLP-SLP
Power Vent Low Profile

Note: Wire harnesses required to power the PVLP-SLP connect to the appliance and are ordered separately from PVLP-SLP. Contact your dealer to order.

Note: A PVLP-HS heat shield is available and sold separately. Use if the PVLP-SLP is installed in a high traffic area.

Note: The PVLP-SLP requires a PV-IPI-CK be installed on this appliance. The PV-IPI-CK is ordered separately from the PVLP-SLP. Contact your dealer to order.

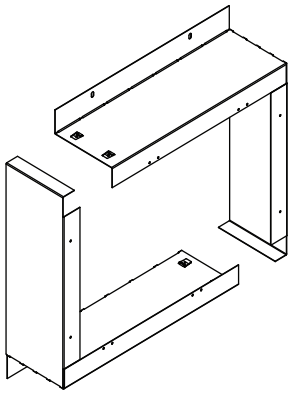

PVLP-BEK
Brick Kit

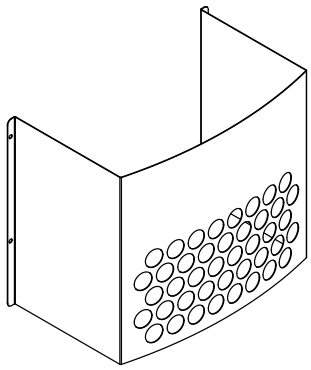

PVLP-HS
Heat Shield

Required Wire Harness	
DESCRIPTION	**PART NUMBER**
10 FT PV Wire Harness	PVI-WH10
20 FT PV Wire Harness	PVI-WH20
40 FT PV Wire Harness	PVI-WH40
60 FT PV Wire Harness	PVI-WH60
80 FT PV Wire Harness	PVI-WH80
100 FT PV Wire Harness	PVI-WH100

Figure 12.7 PVLP-SLP Vent Components

A. Vent Components Diagrams *(continued)*

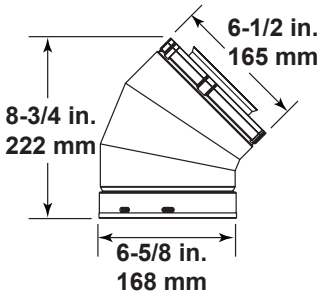

SLP45
45° Elbow

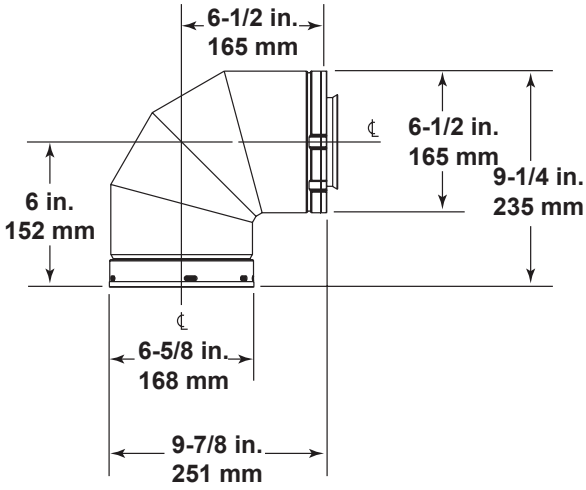

SLP90
90° Elbow

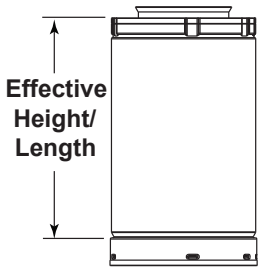

SLP PIPE

Effective Height/Length

Pipe	*inches*	*mm*
SLP4	4	102
SLP6	6	152
SLP12	12	305
SLP24	24	610
SLP36	36	914
SLP48	48	1219
SLP6A	2 - 6	51 - 152
SLP12A	2 - 12	51 - 305
SLP-FLEX-2	24	610
SLP-FLEX-3	36	914
SLP-FLEX-5	60	1524
SLP-FLEX-10	120	3048

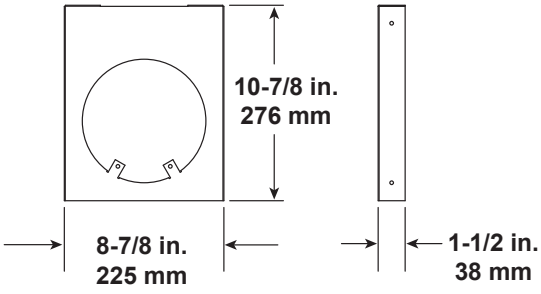

SLP-HVS
Horizontal Pipe
Support

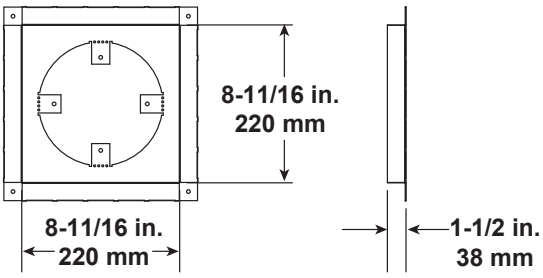

SLP-FS
Ceiling Firestop

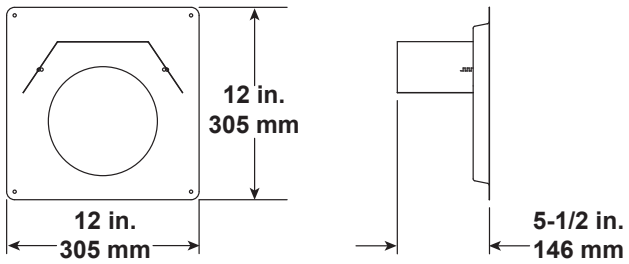

SLP-WS
Wall Shield Firestop

Figure 12.8 SLP Series Vent Components

A. Vent Components Diagrams *(continued)*

Note: Heat shields MUST overlap by a minimum of 1-1/2 in. (38 mm). The heat shield is designed to be used on a wall 4 in. to 7-1/4 in. (102 mm to 184 mm) thick. If wall thickness is less than 4 in. (102 mm) the existing heat shields must be field trimmed. If wall thickness is greater than 7-1/4 in. (184 mm) a DVP-HSM-B will be required.

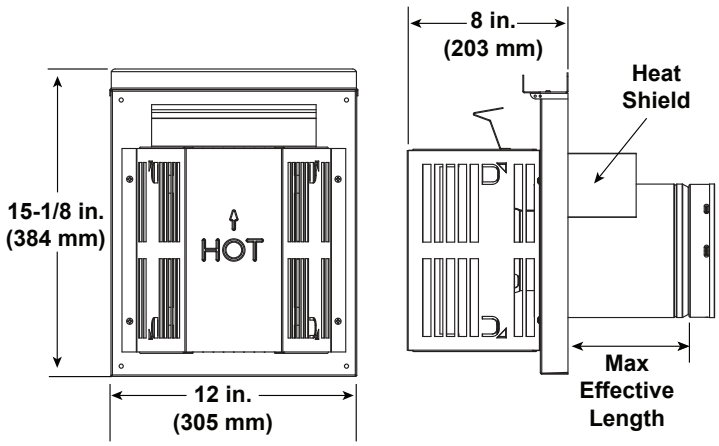

SLP-TRAP
Horizontal Termination Cap

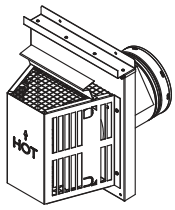

Term Cap	Minimum Effective Length	Maximum Effective Length
Trap1	3-1/8 in.	4-3/4 in.
	79 mm	121 mm
Trap2	5-1/4 in.	9-1/4 in.
	133 mm	235 mm

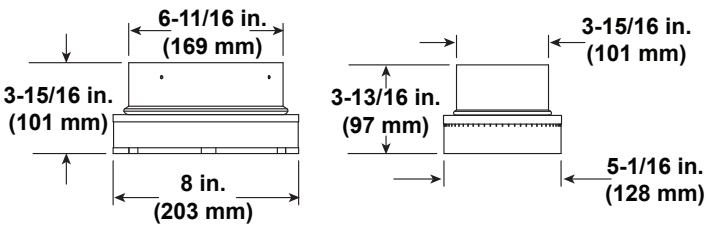

SL-2DVP
Adapter

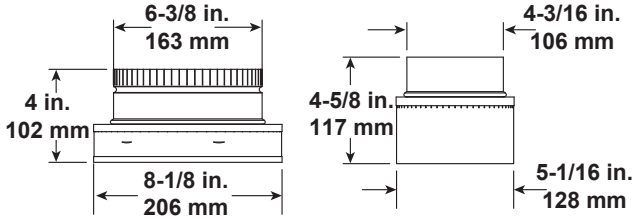

DVP-2SL
Adapter

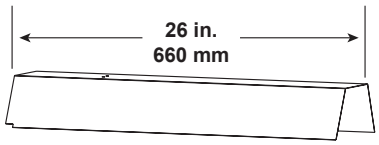

DVP-HSM-B
Extended Heat Shield

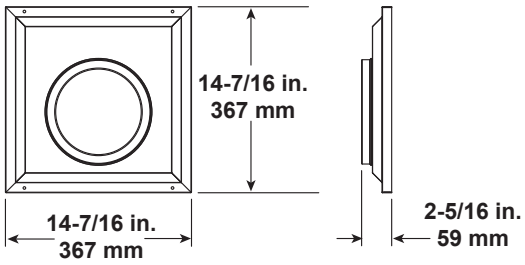

SLP-WT-BK

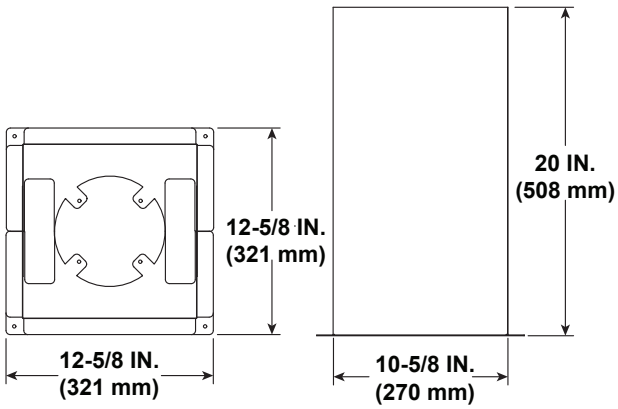

SLP-RDS
ROOF DECK INSULATION SHIELD

Figure 12.9 SLP Series Vent Components

A. Vent Components Diagrams *(continued)*

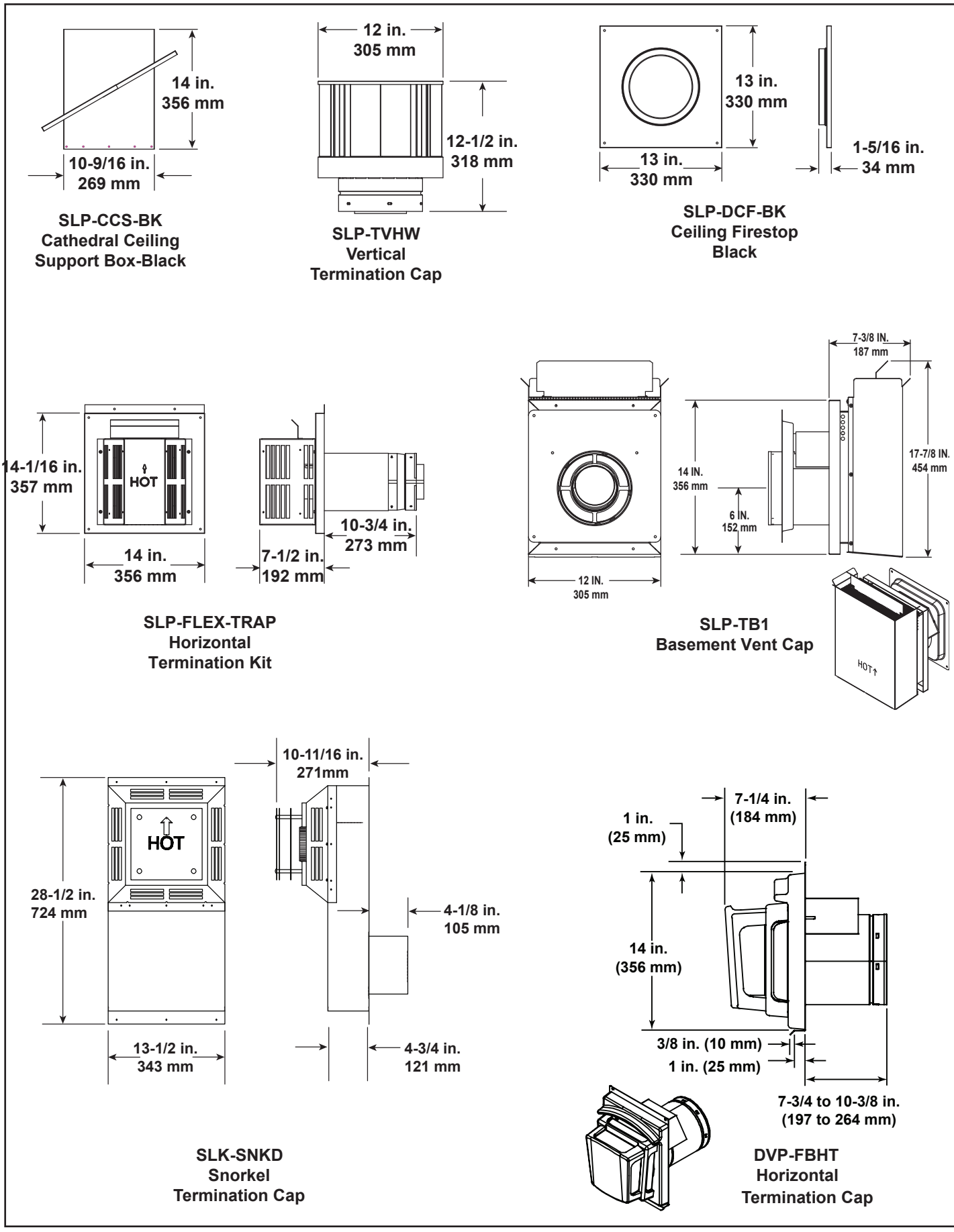

Figure 12.10 SLP Series Vent Components

COAXIAL to COLINEAR VENTING

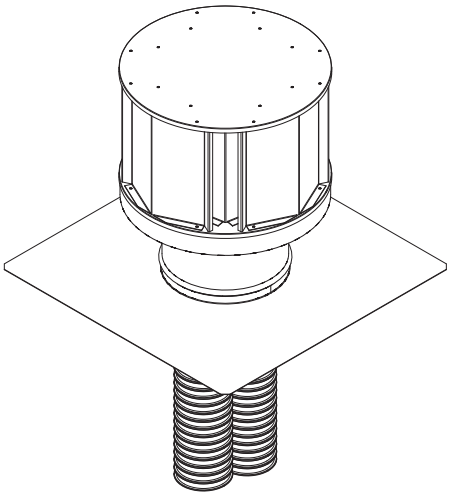

LINK-DV30B
Flex Liner Kit

768-380A
Stainless Steel Flex Pipe

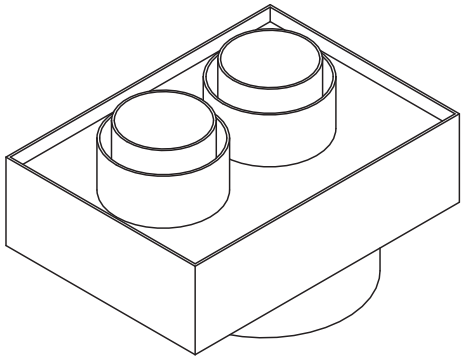

DV-46DVA-GCL
Coaxial/Colinear Appliance Connector

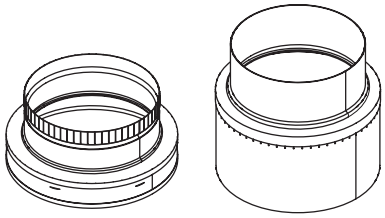

DVP-2SL
Adapter

Figure 12.11 Coaxial to Colinear Vent Components

B. Accessories

Install approved accessories per instructions included with accessories. Contact your dealer for a list of approved accessories.

WARNING! Risk of Fire and Electric Shock! *Use ONLY Hearth & Home Technologies-approved optional accessories with this appliance. Using non-listed accessories could result in a safety hazard and will void the warranty.*

Optional Fan

The optional fan may be installed by a qualified service technician. Refer to installation information in Section 8. Follow the instructions supplied with the fan kit to operate your fan. See your dealer if you have questions.

Wall Switches

Follow the instructions supplied with the control installed to operate your fireplace:

For safety:

- Install a switch lock or a wall control with child protection lockout feature.
- Keep controls out of reach of children.

See your dealer if you have questions.

Heat & Glo, a brand of Hearth & Home Technologies
7571 215th Street West, Lakeville, MN 55044
www.heatnglo.com

Please contact your Heat & Glo dealer with any questions or concerns.
For the location of your nearest Heat & Glo dealer,
please visit www.heatnglo.com.

Printed in U.S.A. - Copyright 2016