Installation Manual

Installation and Fireplace Setup

INSTALLER: Leave this manual with party responsible for installation and operation.
OWNER: Retain this manual for future reference.

Contact your dealer with questions on installation, operation, or service.

***NOTICE: DO NOT** discard this manual!*

heatilator
The first name in fireplaces

Model:

LM42

C UL US
LISTED

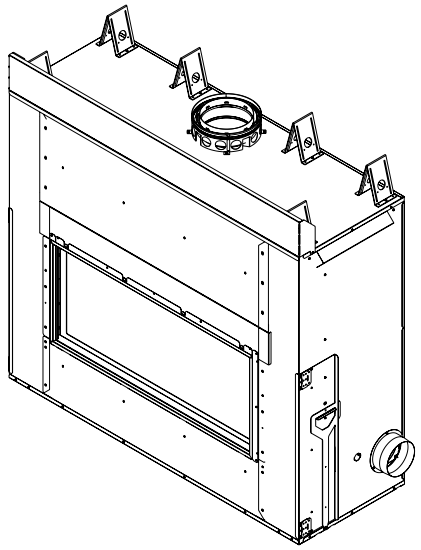

WOODBURNING FIREPLACE

WARNING! Risk of Fire and/or Asphyxiation!

- Read all the instructions before starting the installation. Follow these instructions carefully during the installation to ensure maximum safety and benefit.
- Comply with all minimum clearances to combustibles as specified. Failure to comply may cause house fire.

⚠ WARNING

HOT SURFACES!
Glass and other surfaces are hot during operation AND cool down.

Hot glass will cause burns.
- **DO NOT** touch glass until it is cooled
- NEVER allow children to touch glass
- Keep children away

- CAREFULLY SUPERVISE children in same room as fireplace.
- Alert children and adults to hazards of high temperatures.

High temperatures may ignite clothing or other flammable materials.
- Keep clothing, furniture, draperies and other flammable materials away.

Installation and service of this appliance should be performed by qualified personnel. Hearth & Home Technologies recommends HHT Factory Trained or NFI certified professionals.

hearthED FACTORY TRAINING Fuel Your Hire

NFI NATIONAL FIREPLACE INSTITUTE

Safety Alert Key:

- ***DANGER!*** Indicates a hazardous situation which, if not avoided will result in death or serious injury.
- ***WARNING!*** Indicates a hazardous situation which, if not avoided could result in death or serious injury.
- ***CAUTION!*** Indicates a hazardous situation which, if not avoided, could result in minor or moderate injury.
- ***NOTICE:*** Indicates practices which may cause damage to the fireplace or to property.

Table of Contents

1 Product Specific & Important Safety Information
A. Fireplace Certification 4
B. Glass Speficition 4
C. Non-Combustible Materials 4
D. Combustible Materials 4

2 Getting Started
A. Typical Fireplace System 5
B. Design and Installation Considerations 6
1. Locating Fireplace & Chimney 6
2. Selecting Fireplace Locations 6
C. Tools and Supplies Needed 8
D. Inspect Fireplace and Components 8
E. Fireplace System Requirements 9

3 Framing and Clearances
A. Fireplace Dimensions 10
B. Clearances 11
C. Construct the Chase 13
D. Frame the Fireplace 14
► E. Secure and Level the Fireplace 14
F. Protective Metal Hearth Strips 15
G. Outside Air Kit (required) 16
H. Non-Combustible Facing Material Installation 17

4 Chimney and Termination Requirements
A. Chimney Requirements 18
B. Offsets/Returns 19
C. Termination Requirements 20

5 Chimney Installation
A. Typical Chimney System 21
B. Assemble Chimney Sections 22
C. Secure Offset/Return 22
D. Install Firestops 23
E. Install Attic Insulation Shield 24
F. Thimble Installation - Manufactured Home 25
G. Roof Penetration 26
H. Install Chase/Chase Top 26
I. Install Termination Cap 27

6 Shrouds
A. Radiation Shield 29
B. Field Constructed Shrouds 29
1. Open Top Shroud 29
2. Mailbox Style Shroud 30
3. Roofed Style Shroud 30

7 Facing, Mantels & Hearth Extensions
A. Finishing Material 31
B. Hearth Extension, Building and Finishing 32
1. Fireplace Installed Flush on the Floor and Hearth Extension Raised to Bottom of Firebox Opening 33
2. Raised Hearth Extension and Raised Fireplace 33
3. Fireplace Opening and Hearth Extension Flush with the Floor 33
C. Mantel and Wall Projections 34
D. Sidewalls/Surrounds 35

8 Fireplace Accessories
A. Gas Log/Lighter Provision 36

9 Reference Materials
► A. Chimney Components 37
B. Optional Components 41

➔ = Contains updated information.

ATTENTION INSTALLER:

Follow this Standard Work Checklist

This standard work checklist is to be used by the installer in conjuction with, not instead of, the instructions contained in this installation manual.

Customer: _____ **Date Installed:** _____

Lot/Address _____ **Location of Fireplace:** _____

_____ **Installer:** _____

Model (circle one): LM42 **Dealer/Distributor Phone #** _____

Serial #: _____

WARNING! Risk of Fire or Explosion! *Failure to install fireplace acording to these instructions can lead to a fire or explosion.*

Fireplace Install	**YES**	**IF NO, WHY?**
Verified that the chase is insulated and sealed. Section 3	☐	
Verified clearances to combustibles. Section 3	☐	
Protective hearth strips installed per manual requirements. Section 3	☐	
Fireplace is leveled and secured. Section 3	☐	
Hearth extension size/height decided. Section 7	☐	
Outside air kit installed. Section 3	☐	
Door and screen weights installed. Section Section 2	☐	
Required factory included non-combustible board is in place	☐	
Chimney Section 4 & 5		
Chimney configuration complies with diagrams.	☐	
Chimney installed, locked and secured in place with proper clearance.	☐	
Chimney air kit installed.	☐	
Firestops installed.	☐	
Attic insulation shield installed.	☐	
Roof flashing installed.	☐	
Termination installed.	☐	
Shrouds Section 6		
Shroud is installed properly per instructions.	☐	
Facing, Mantels & Hearth Extensions Section 7		
Combustible materials not installed in non-combustible areas.	☐	
Verified all clearances meet installation manual requirements.	☐	
Mantels and wall projections comply with installation manual requirements.	☐	
Hearth extension installed per manual requirements.	☐	
Fireplace Setup Section 8		
All packaging and protective materials removed.	☐	
Refractory installed correctly.	☐	
Grate is properly installed.	☐	
Manual bag and all of its contents are removed from the fireplace and given to the party responsible for use and operation.	☐	

Hearth & Home Technologies recommends the following:

- Photographing the installation and copying this checklist for your file.
- That this checklist remain visible at all times on the fireplace until the installation is complete.

Comments: Further description of the issues, who is responsible (Installer/Builder/Other Trades, etc.) and corrective action needed:

_____

_____

_____

Comments communicated to party responsible _____ by _____on _____

(Builder/Gen. Contractor) (Installer) (Date)

4087-982 • Rev B • 02/17

1 Product Specific & Important Safety Information

A. Fireplace Certification

This fireplace system has been tested and listed in accordance with UL 127 and ULC-S610 standards by Underwriters Laboratories Inc. for installation and operation in the United States and Canada.

WARNING! *THIS FIREPLACE MAY BE INSTALLED IN MANUFACTURED HOMES, EXCEPT IN SLEEPING ROOMS.*

If installed with a gas log set, provisions for the National Fuel Gas Code must be met.

This fireplace complies with the installation requirements for HUD.

CAUTION! *THE STRUCTURAL INTEGRITY OF THE MANUFACTURED HOME FLOOR, WALL, AND CELING/ ROOF MUST BE MAINTAINED.*

Heatilator is a registered trademark of Hearth & Home Technologies.

WARNING! Risk of Fire! *Hearth & Home Technologies disclaims any responsibility for, and the warranty and agency listing will be voided by the following actions.*

DO NOT:

- *install or operate damaged fireplace*
- *modify fireplace*
- *install other than as instructed by Hearth & Home Technologies*
- *operate the fireplace without fully assembling all components*
- *overfire*
- *install unvented gas log set*
- *install any component not approved by Hearth & Home Technologies*
- *install parts or components not Listed or approved*

Improper installation, adjustment, alteration, service or maintenance can cause injury or property damage. For assistance or additional information, consult a qualified installer, service agency or your dealer.

B. Glass Specifications

- This appliance is equipped with 5mm ceramic glass. Please contact your dealer for replacement glass.

C. Non-Combustible Materials

- Materials which will not ignite and burn, composed of any combination of the following:
  - Steel
  - Iron
  - Brick
  - Tile
  - Concrete
  - Slate
  - Glass
  - Plasters
- Materials reported as passing **ASTM E 136, Standard Test Method for Behavior of Metals, in a Vertical Tube Furnace at 750° C**

D. Combustible Materials

- Materials made of or surfaced with any of the following materials:
  - Wood
  - Compressed paper
  - Plant fibers
  - Plastic
  - Plywood/OSB
  - Sheet rock (drywall)
  - Foam insulation & sealants
- Any material that can ignite and burn; flame proofed or not, plastered or un-plastered

⚠ WARNING

Improper installation, adjustment, alteration, service or maintenance can cause injury or property damage. Refer to the owner's information manual provided with this fireplace. For assistance or additional information consult a qualified installer, service agency or your dealer.

Not intended for use as a primary heat source.

This fireplace is tested and approved as a decorative fireplace. It should not be factored as a primary heat source in residential heating calculations.

⚠ WARNING

Fire Risk

TO AVOID THE RISK OF DAMAGING FIREPLACE MATERIALS AND INCREASING THE RISK OF SPREADING A FIRE, **DO NOT USE THE FIREPLACE TO COOK OR WARM FOOD.**

A. Typical Fireplace System

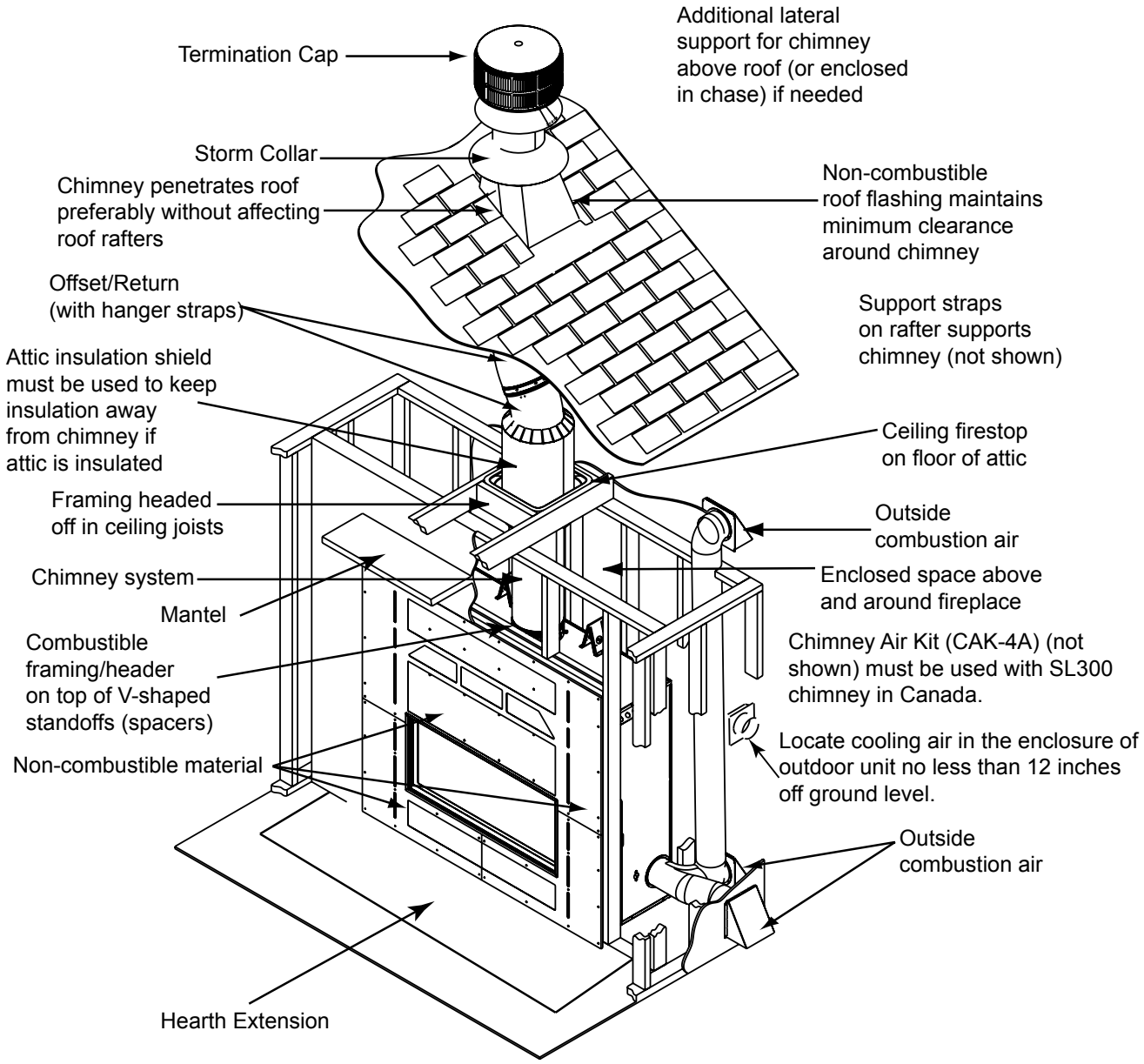

Figure 2.1 Typical Fireplace System

B. Design and Installation Considerations

Consideration should be given to these factors before deciding on a location.

NOTICE: *Check building codes prior to installation.*

- Installation MUST comply with local, regional, state and national codes and regulations.
- Consult local building inspector, fire officials or authorities having jurisdiction over restrictions, installation inspection and permits.
- **Before installing**, determine the following:
  - Where the fireplace is to be installed.
  - The chimney system configuration to be used.
  - Facing, mantel, hearth construction and finishing details.
  - Gas supply piping.

1. Locating Fireplace & Chimney

Location of the fireplace and chimney will affect performance.

- Install within the warm airspace enclosed by the building envelope. This helps to produce more draft, especially during lighting and die-down of the fire.
- Installing the fireplace in a basement is not recommended due to negative pressure concerns.
- Penetrate the highest part of the roof. This minimizes the effects of wind loading.
- Locate termination cap away from trees, adjacent structures, uneven roof lines and other obstructions.
- Minimize the use of chimney offsets.
- Consider the fireplace location relative to floor and ceiling and attic joists.
- Take into consideration the termination requirements in Sections 4 and 5.
- Install the outside air kit with the intake facing prevailing winds during the heating season.
- Ensure adequate outdoor air for all combustion appliances and exhaust equipment.
- Ensure furnace and air conditioning return vents are not located in the immediate vicinity of the fireplace.
- Avoid installing the fireplace near doors, walkways or small isolated spaces.
- Recessed lighting should be a “sealed can” design.
- Attic hatches weather stripped or sealed.
- Attic mounted duct work and air handler joints and seams taped or sealed.

2. Selecting Fireplace Locations Within A Room

This fireplace may be used as a room divider, installed along a wall, across a corner or used in an exterior chase. See Figure 2.3.

WARNING! Risk of Fire! Hearth extension design must be determined before framing and installation of fireplace. Any installation outside the scope as stated in this manual please contact your authorized HHT dealer prior to installation.

WARNING! *In addition to these framing dimensions, also reference the following section: Clearances (Section 3).*

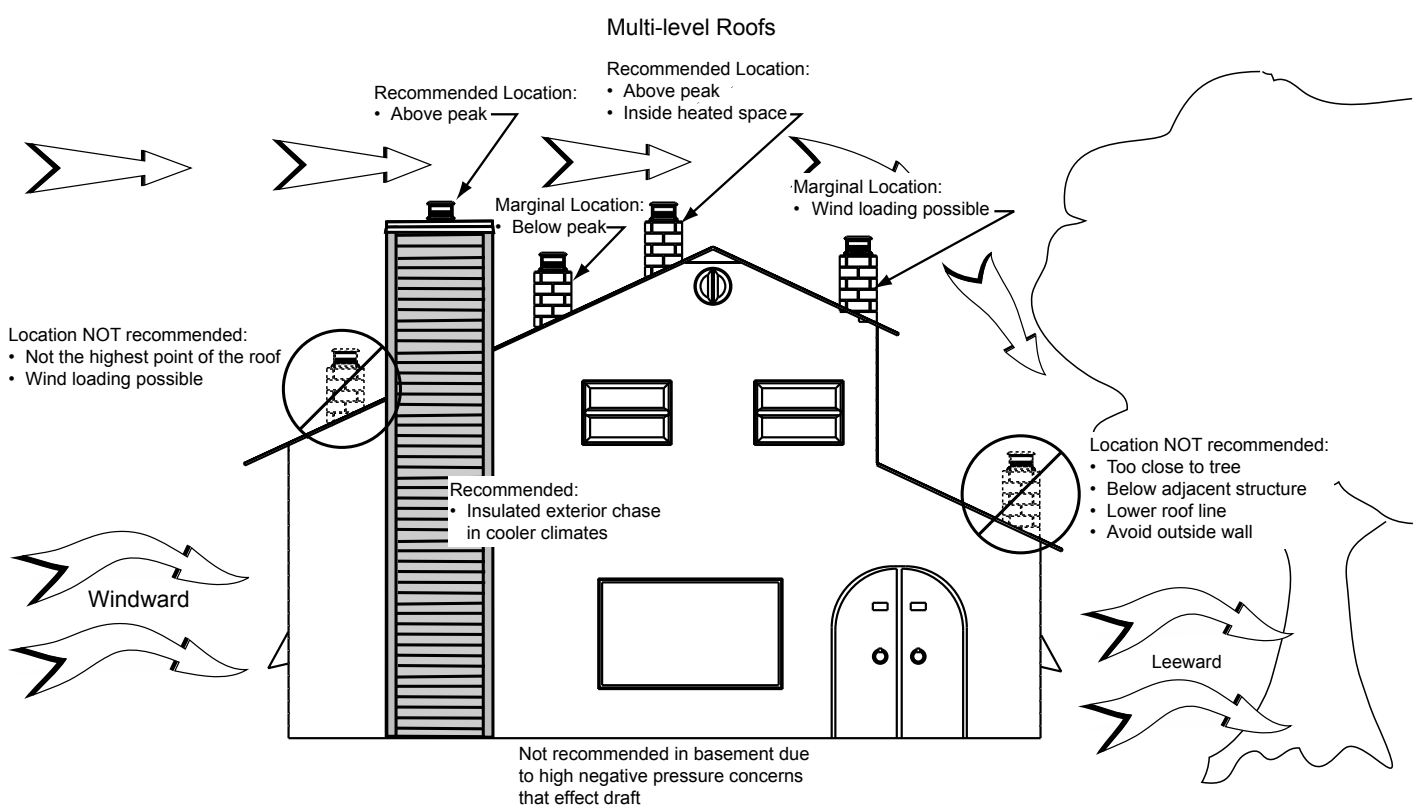

Figure 2.2 Recommended Chimney Locations

NOTICE:

- *Illustrations and photos reflect typical installations and are FOR DESIGN PURPOSES ONLY.*
- *Illustrations/diagrams are not drawn to scale.*
- *Actual installation/appearance may vary due to individual design preference.*
- *Hearth & Home Technologies reserves the right to alter its products.*

⚠ WARNING

Fire Risk

Provide adequate clearances.

- Around air openings
- To combustibles
- For service access.

Locate fireplace away from traffic areas.

- **Outside Air Kit**

  The Outside Air Kit is required for the performance of the fireplace. The Outside Air Kit is installed on the right hand side of the fireplace.
  - Cut a 6-1/2 in. (165mm) hole in outside wall to accomodate air piping.
  - Use 6 in. (152mm) flex (not supplied) to directly connect outside air to fireplace intake.
  - Use the supplied outside air inlet hood. It can be painted to match/accent the color of the structure.

Note:

- Illustrations and photos reflect typical installations and are FOR DESIGN PURPOSES ONLY.
- Illustrations/diagrams are not drawn to scale.
- Actual installation/appearance may vary due to individual design preference.
- Hearth & Home Technologies reserves the right to alter its products.

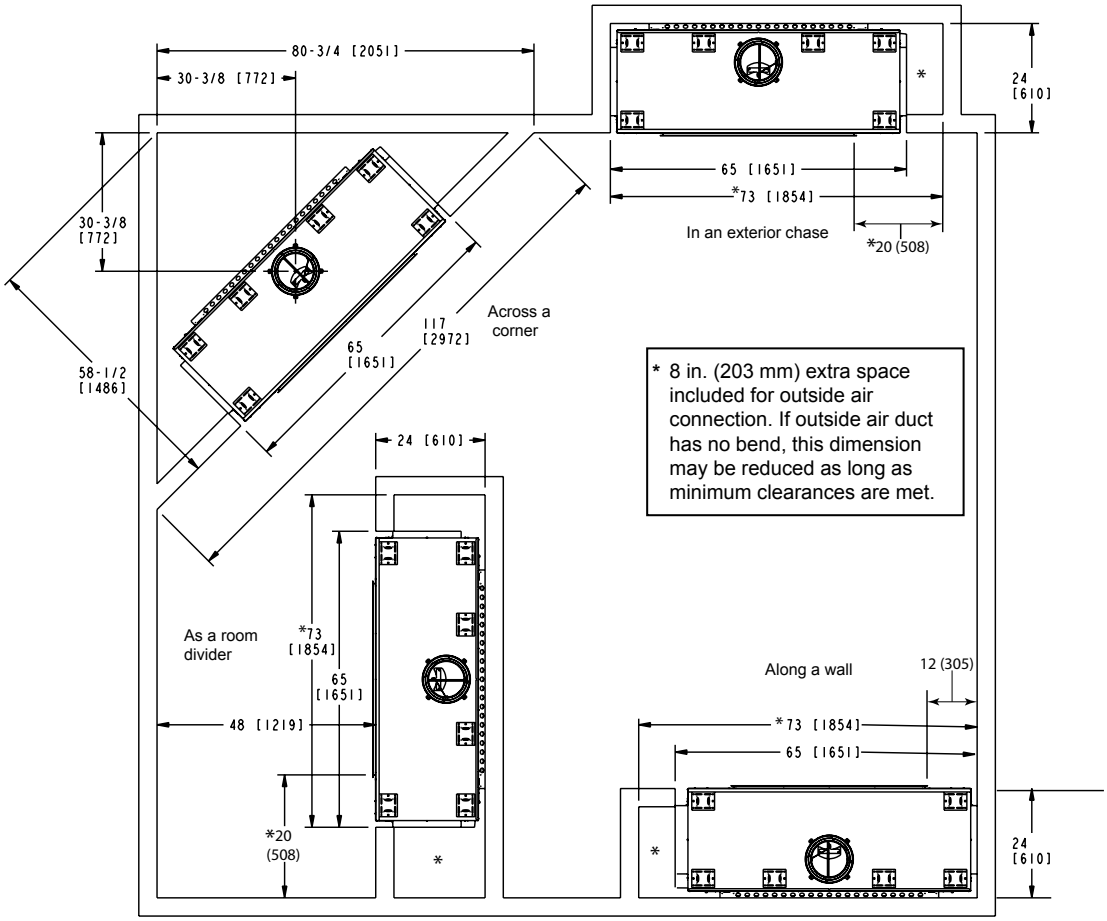

Note: *Measurements are FRAMING dimensions only. Adjust framing dimensions for interior sheathing (such as sheet rock).*

Note: *Unit standoffs can be placed against combustible materials. Maintain 1-1/2 in. (38mm) air space otherwise. Do not fill area with insulation. Do not remove standoffs.*

Figure 2.3 Fireplace Locations

C. Tools and Supplies Needed

Before beginning the installation be sure the following tools and building supplies are available:

Reciprocating saw	Framing material
Pliers	Non-combustible sealant
Hammer	Gloves
Phillips screwdriver	Framing square
Flat blade screwdriver	Electric drill and bits
Plumb line	Safety glasses
Level	Tape measure
1/2-3/4 in. length, #6 or #8 self-drilling screws	
Misc. screws and nails	
600° Silicone sealant	300° Silicone sealant

CAUTION! Risk of Cuts/Abrasions. *Wear protective gloves and safety glasses during installation. Sheet metal edges are sharp.*

D. Inspect Fireplace and Components

WARNING! Risk of Fire and Asphyxiation! *Damaged parts could impair safe operation.* ***DO NOT*** *install damaged, incomplete or substitute components.*

1. Unpacking
   a. Remove the carton
   b. Remove corner posts
   c. Remove the non-combustible kit from the rear of the fireplace
      i. Set aside for future installation
   d. Remove the weight assemblies from the holders on the front of the pallet
   e. Remove the weight holders from the pallet
   f. Pivot carry handle forward to allow access to side cover panel
   g. Remove the side cover access panel from side of unit
      i. Remove 10 screws from each side. Retain screws.
      ii. Lay the nailing flanges aside. See Figure 2.4.

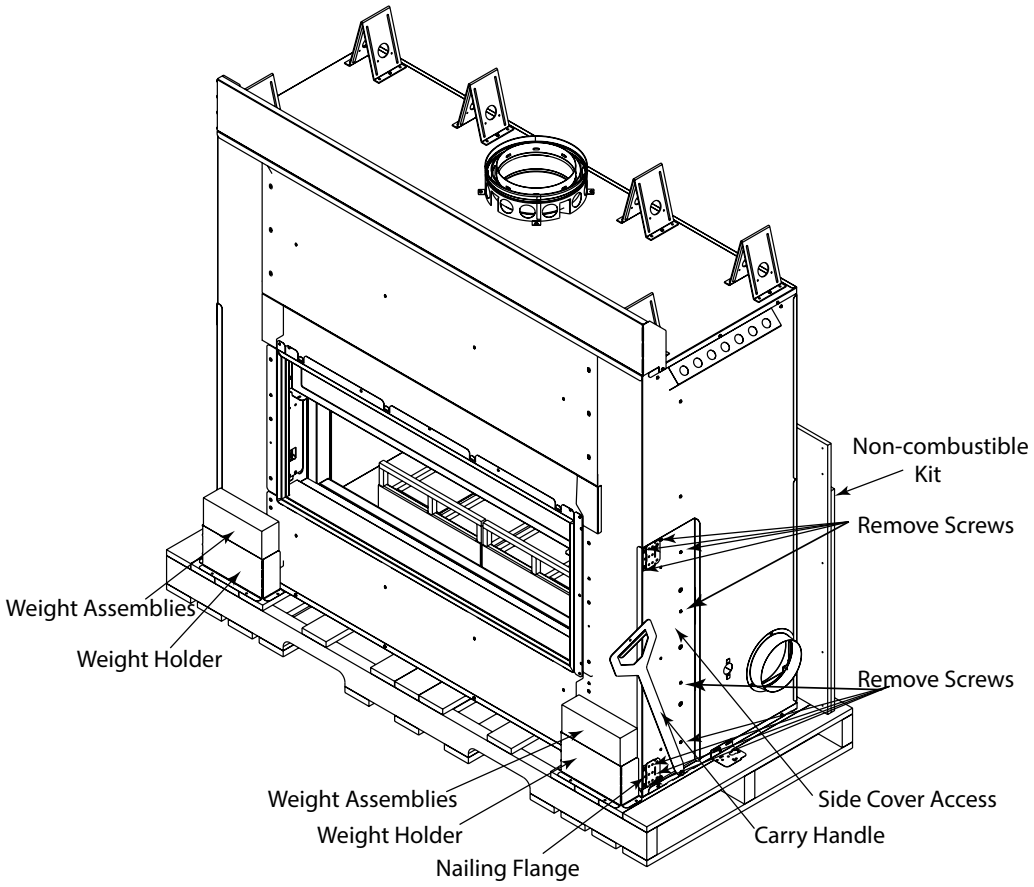

Figure 2.4

h. Disconnect the cable towards the rear of the unit (Glass Door) and install larger weight assembly (28 weights)

i. Disconnect the cable towards the front of the unit (Screen Door) and install the smaller weight assembly (8 weights). Double check both sides to make sure the snap rings are all straight up.

j. Reinstall the side cover access panel

   i. Nailing flanges should go on opposite as the direction taken off

   ii. When nailing flanges are bent out, they should be flush with front of unit.

k. Repeat for the other side. See Figure 2.4.

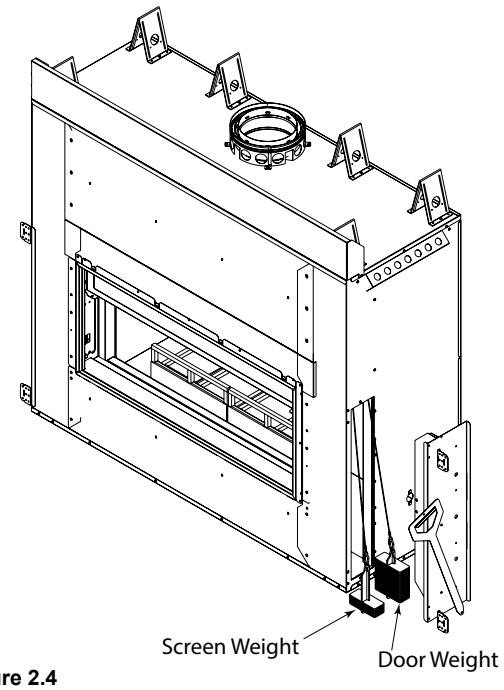

Figure 2.4

l. Remove the dust cover from fireplace opening and set aside

m. Remove the components from the firebox

   i. Attic Insulation Shield

   ii. OA Hood and collar

   iii. Manual bag

   iv. Removable door handle

   v. Protector Strips

n. Locate the (4) screws (2 on each end) that hold the door and screen to the shipping bracket and remove and discard them.*(see figure 2.5)

o. Loosen two screws towards bottom of the shipping bracket on both sides (do not remove completely)

p. Remove screw at the center of the shipping bracket, remove bracket and reinstall center screw after shipping bracket has been removed

q. Tighten screws at the bottom that were loosened earlier

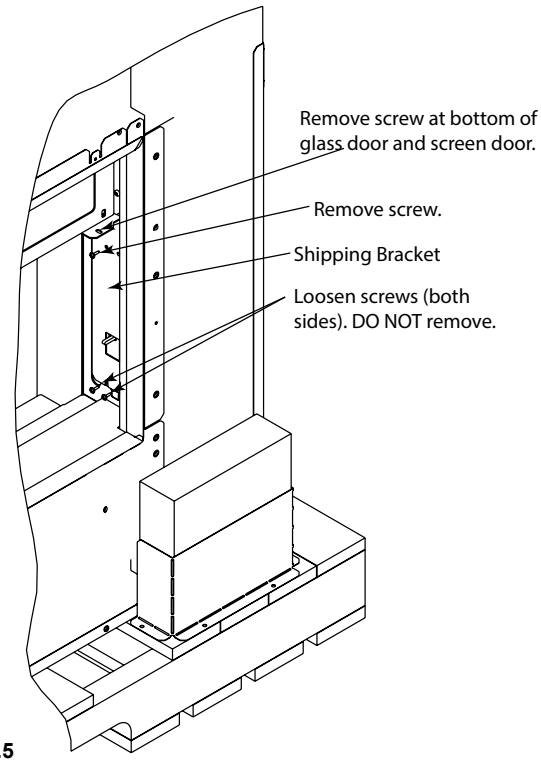

Figure 2.5

r. Repeat for the other side. See Figure 2.5.

s. Check door operation before setting unit

t. Remove screws from pallet brackets

*Shipping bracket can remain in place until unit is set but weights should be installed.

- **NOTE: Remove fireplace and components from packaging and inspect for damage.**
- Chimney system components and other optional components are shipped separately.
- Report to your dealer any parts damaged in shipment.

E. Fireplace System Requirements

The Heatilator fireplace system requirements consist of the following:

- Fireplace
  - Refractory (included with fireplace)
  - Firescreen (included with fireplace)
  - Grate (included with fireplace)
  - Door (included with fireplace)
  - Hearth Extension (required, not included)
    See Section 7 for construction requirement
- Outside Air System (required)
  - Inlet hood and collar included with fireplace
  - Flex (required, not included)
  - Cooling air required for outdoor freestanding unit only if using combustible material (hood not included)
- Chimney System (components as required)
  - Attic Insulation Shield (included with fireplace)

3 Framing and Clearances

A. Appliance Diagrams

Dimensions are actual appliance dimensions. Use for reference only. For framing dimensions and clearances refer to Figure 3.2 & 3.3.

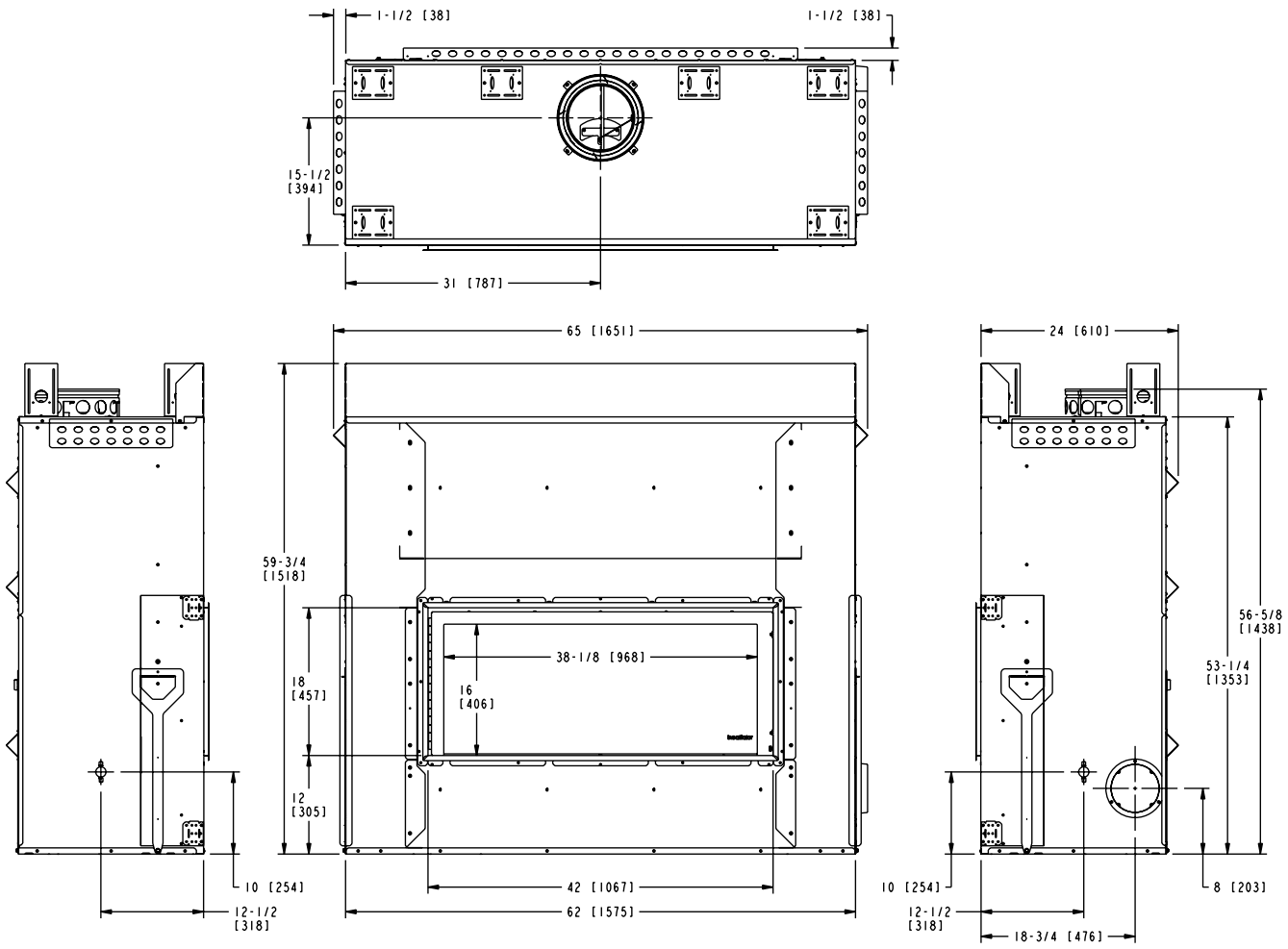

Figure 3.1 Fireplace Dimensions

Section 3

B. Clearances Within Enclosed Area

WARNING! Risk of Fire!

You must comply with all minimum air space clearances to combustibles as specified in Figure 3.2. ***WARNING! DO NOT*** *PACK REQUIRED AIR SPACES WITH INSULATION OR OTHER MATERIALS. Framing or finishing material used on the front of, or in front of, the fireplace closer than the minimums listed must be constructed entirely of non-combustible materials (i.e., steel studs, concrete board, etc.). Failure to comply may cause a fire.*

Minimum Clearances to Combustibles

WITHIN ENCLOSURE AREA	
Standoffs to backwall	0 in. (0 mm)
Standoffs to sidewall	0 in. (0 mm)
Top standoffs to header	0 in. (0 mm)
Door opening to sidewall	12 in. (305 mm)

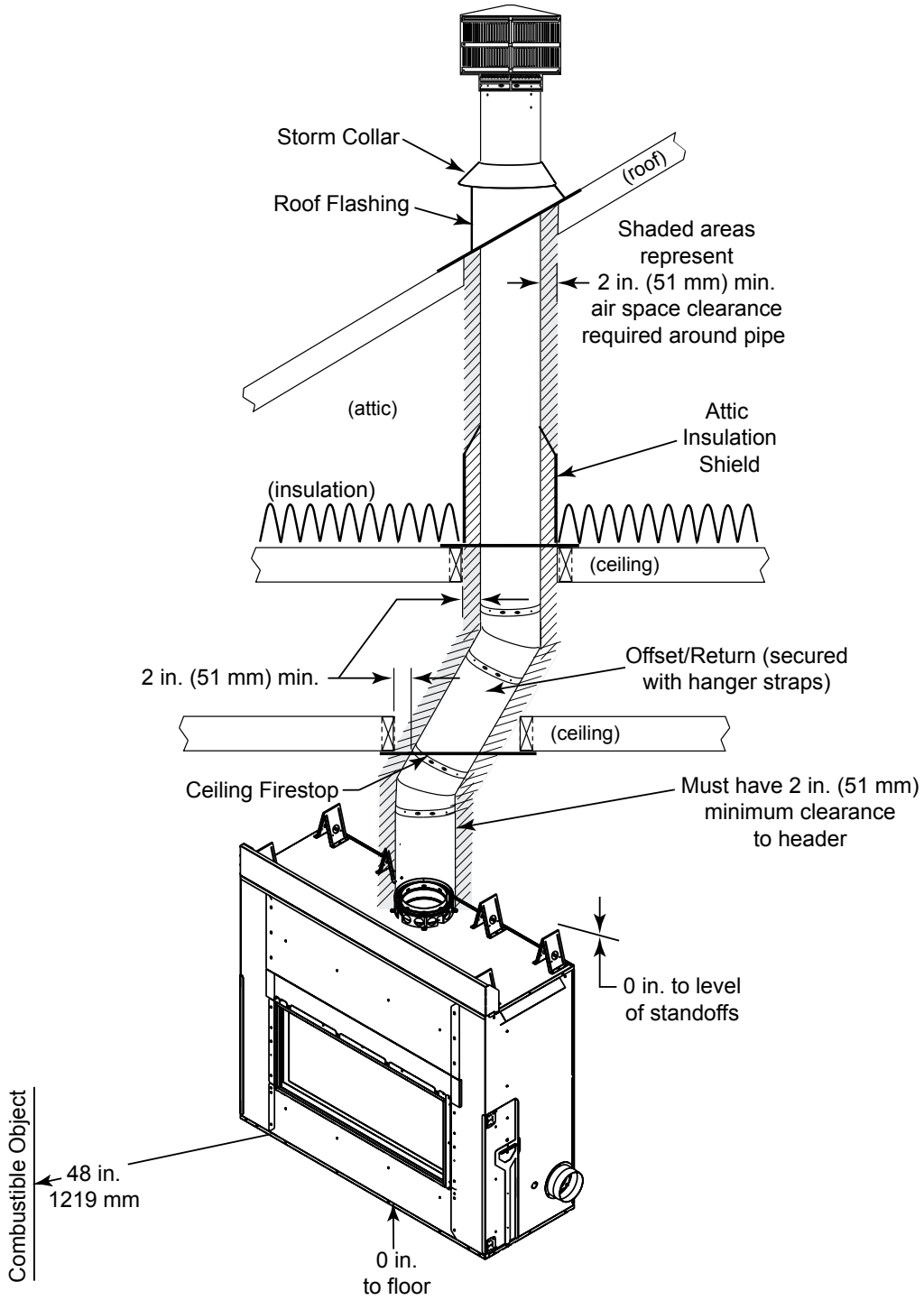

Figure 3.2 Clearances to Combustible Materials

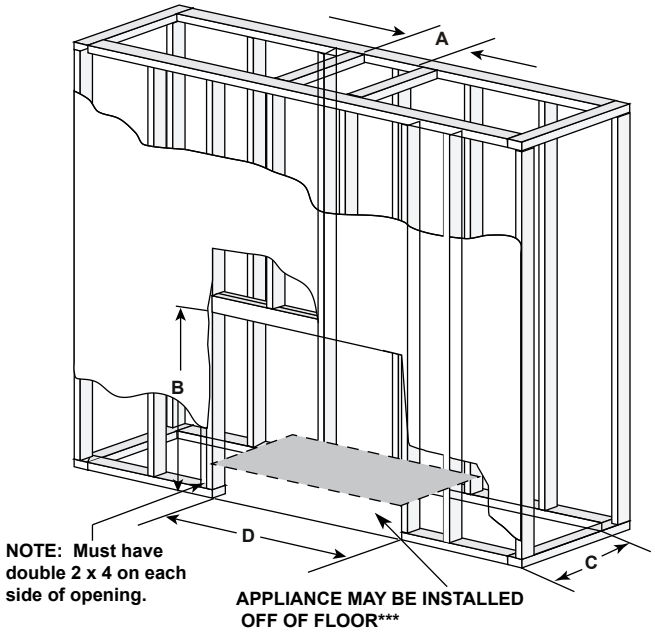

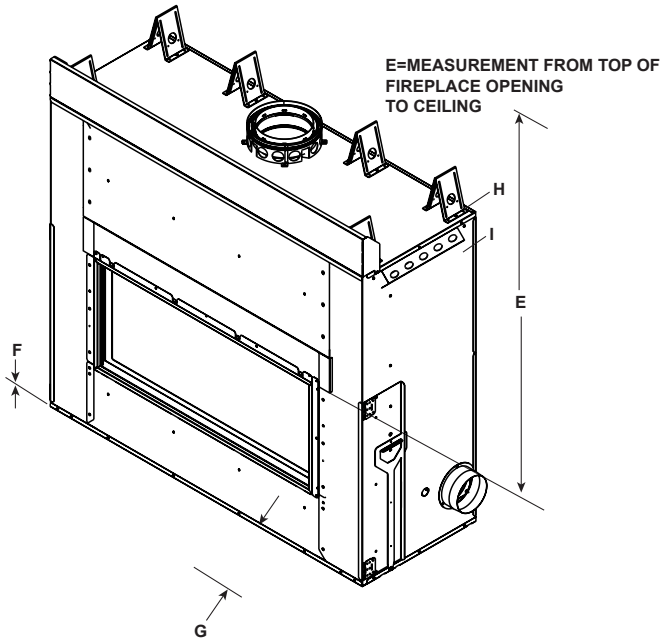

MINIMUM FRAMING DIMENSIONS*									
LM42	A	B	C*	D	E	F	G	H	I
	Rough Opening (Vent Pipe)	Rough Opening (Height)	Rough Opening (Depth)	Rough Opening (Width)	Clearance to Ceiling	Combustible Floor	Minimum Hearth Depth	Standoff Behind Appliance	Standoff Side of Appliance
Inches	14-1/2	60-1/4	24	65-1/2	36	0	16	0	0
Millimeters	368	1530	610	1664	914	0	406	0	0

*** = Adjust framing dimensions for interior sheathing (such as sheetrock)**
*****= If appliance is installed off of floor, maintain required clearances to combustibles. Construct platform in accordance with local building codes.**

Figure 3.3 Clearances to Combustibles

C. Construct the Chase

***WARNING! Risk of Fire! DO NOT** seal area between fire stop opening and chimney pipe except where they enter the attic or leave the warm air envelope of the home (use 600° F sealant).*

***WARNING! Risk of Fire!** You must maintain a minimum 2 in. (51 mm) air space clearance to insulation and framing surrounding the chimney system.*

A chase is a vertical boxlike structure built to enclose the fireplace and/or its vent system. Vertical chimneys that run on the outside of a building must be installed inside a chase. See Figure 3.4.

Construction of the chase may vary with the type of building. Local building codes MUST be followed.

Hearth & Home Technologies recommends:

- The inside surfaces be drywalled and taped (or the use of an equivalent method) for maximum air tightness to the false ceiling.
- In cold climates, the walls of the chase should be insulated to the level of the false ceiling as shown in Figure 3.4. This will help reduce heat loss from the home around the fireplace.
- Holes and other openings should be caulked with high temperature caulk or stuffed with unfaced fiber glass insulation.

• Requirements for constructing the chase:

- A firestop spacer and attic insulation shield should be installed at the false ceiling. See Figure 3.4.
- The chase must be properly blocked to prevent blown insulation or other combustibles from entering and making contact with fireplace or chimney.
- The chase top must be constructed of non-combustible material.

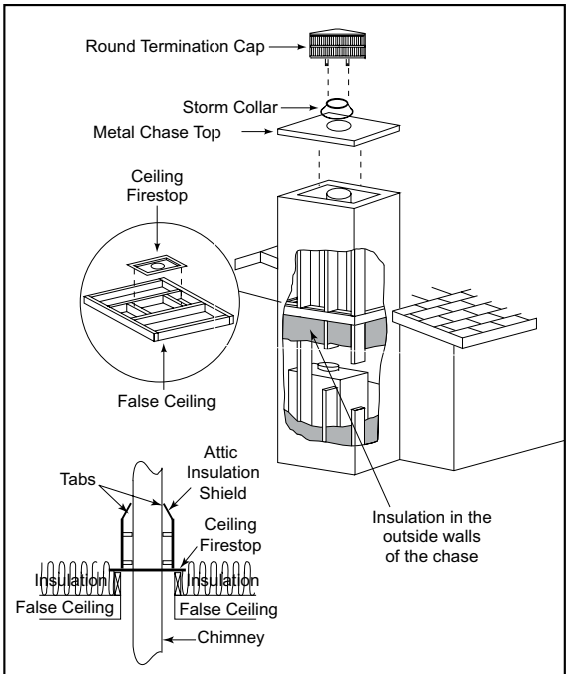

Figure 3.4 Chase Assembly

Three examples of chase applications are shown in Figure 3.5.

1. Fireplace and chimney enclosed in an exterior chase.
2. Chimney offset through exterior wall and enclosed in chase.
3. Chase constructed on roof.

All outside walls should be insulated.

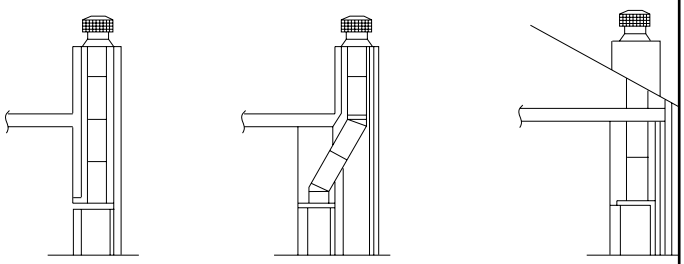

1 2 3

Figure 3.5 Chase Applications

D. Frame the Fireplace

WARNING! Risk of Fire! Hearth extension design must be determined before framing and installation of fireplace. Any installation outside the scope as stated in this manual please contact your authorized HHT dealer prior to installation.

The fireplace will fit a framed opening of:

LM42: 60-1/4 in. (1530 mm) tall and 65-1/2 in. (1664 mm) wide.

Figure 3.6 shows a typical framing (using 2 x 4 lumber) of the fireplace, assuming combustible materials are used. All required clearances to combustibles around the fireplace must be adhered to. See Figure 3.3. Any framing across the top of the fireplace must be above the level of the top standoffs.

The finished cavity depth must be no less than 24 in. (610 mm) from the finished backwall to the outside of front wall framing.

WARNING! Risk of Fire! *Comply with all minimum clearances specified.*

- *Standoffs can be 0 in. to combustibles.*
- *Chimney sections at any level require a 2 in. (51 mm) minimum air space clearance between the framing and chimney section.*
- **DO NOT** *pack required air space with insulation or other materials.*

- ***DO NOT*** *install against vapor barriers or exposed insulation.*
- *Ensure insulation and vapor barriers are secured in place with respect to the fireplace and chimney system.*

CAUTION! *Risk of Cuts/Abrasions. Wear protective gloves and safety glasses during installation. Sheet metal edges are sharp.*

E. Secure and Level the Fireplace

This fireplace may be placed on either a combustible or noncombustible continuous flat surface. **DO NOT** install directly on carpeting, vinyl, tile or any combustible material other than wood.

The fireplace should be positioned so the face of the noncombustible material on the fireplace will be flush with the face of the drywall on the walls.

Level the fireplace and shim as necessary. Square the unit and fasten unit nailing flanges to framing using nails or screws through the nailing tabs.

Some figures in manual show the fireplace installed on the floor. However, this fireplace can be elevated off the floor provided that the fireplace is properly supported by framing materials and the ceiling clearances are maintained.

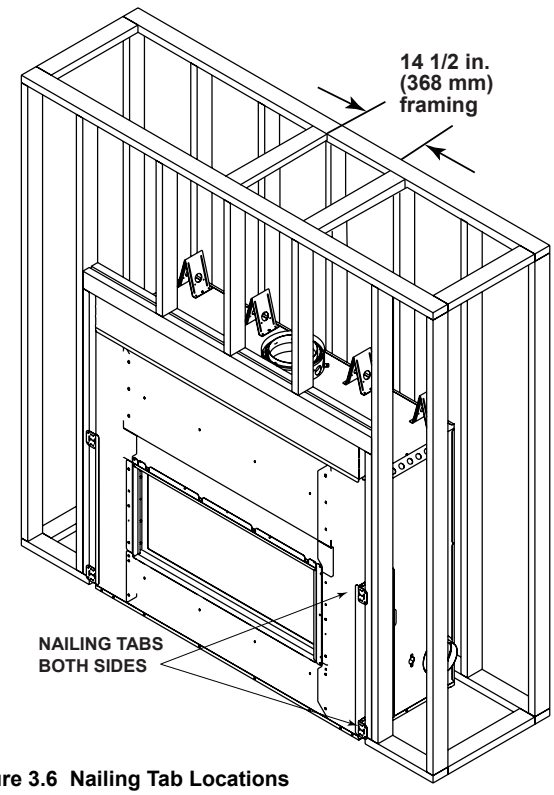

Figure 3.6 Nailing Tab Locations

F. Protective Metal Hearth Strips

WARNING! Risk of fire! *High temperatures, sparks, embers or other burning material falling from the fireplace may ignite flooring or concealed combustible surfaces.*

- *Protective metal hearth strips MUST be installed over combustible surfaces.*
- *Hearth extensions MUST be installed exactly as specified.*

- Locate the two protective metal hearth strips measuring approximately 26 in. x 4 in. (660 mm x 102 mm) included with this fireplace.
- Slide each metal strip 2 in. (51 mm) under front edge of fireplace.
- Overlap strips in the middle of fireplace opening by 1 in. (25 mm) minimum.
- Metal strips must extend beyond the front and sides of the fireplace opening by at least 2 in. (51 mm). See Figure 3.7.
- When the fireplace opening is elevated more than 12 in. (305mm) above the hearth extension, protect the joint of the hearth extension and wall with metal hearth strip. Seal with grout, mortar or high temperature sealant.
- Refer to Section 7.

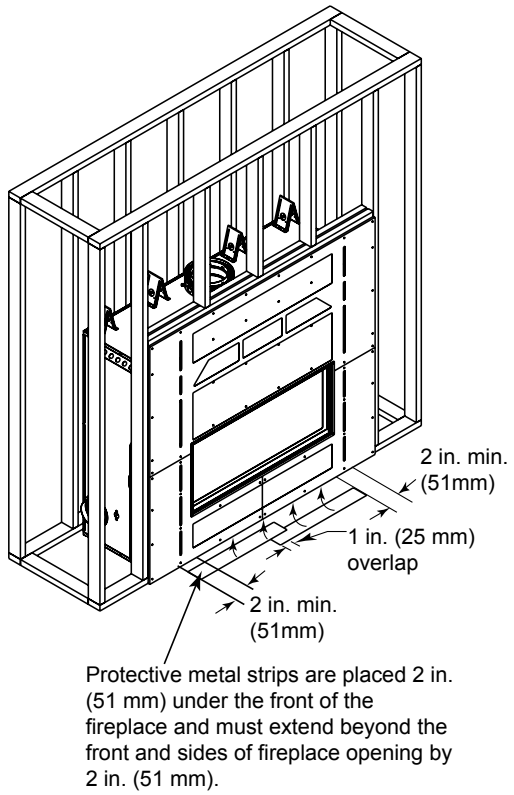

Figure 3.7 Position the Protective Metal Hearth Strips

G. Outside Air Kit

***WARNING! Risk of Fire or Asphyxiation! DO NOT** draw outside combustion air from wall, floor or ceiling cavity, or enclosed spaces such as an attic or garage.*

- ***DO NOT** place outside air inlet hood close to exhaust vents or chimneys. Fumes or odor could be drawn into the room through the fireplace.*
- *Locate outside air inlet hood to prevent blockage from leaves, snow/ice, or other debris. Blockages could cause combustion air starvation.*

When installing an outside air kit, it is recommended to utilize the shortest duct run to optimize the performance of the outside air kit using up to a maximum length of 30 ft. The outside air inlet hood should be positioned in a manner that will not allow snow, leaves, etc. to block the inlet. In some installations the air duct may need to be run vertically. In such an installation, a 3 ft (914 mm) height difference must be maintained from the top of the uppermost chimney section to the outside air inlet hood.

Refer to Figures 3.8 and 3.9 when placing the outside air inlet hood.

The outside air kit is installed on the right hand side of the fireplace.

- Cut a 6-1/2 in. (165 mm) hole in outside wall to accommodate air piping.
- Use 6 in. (152 mm) flex or rigid ducting (not supplied) to directly connect outside air to fireplace intake. Insulate the pipe to prevent frost condensation.
- Use the supplied outside air inlet hood.
- Seal between the wall and the pipe with silicone to prevent moisture penetration and air leaks.
- Seal between the outside air inlet hood and the house with silicone to prevent air infiltration.

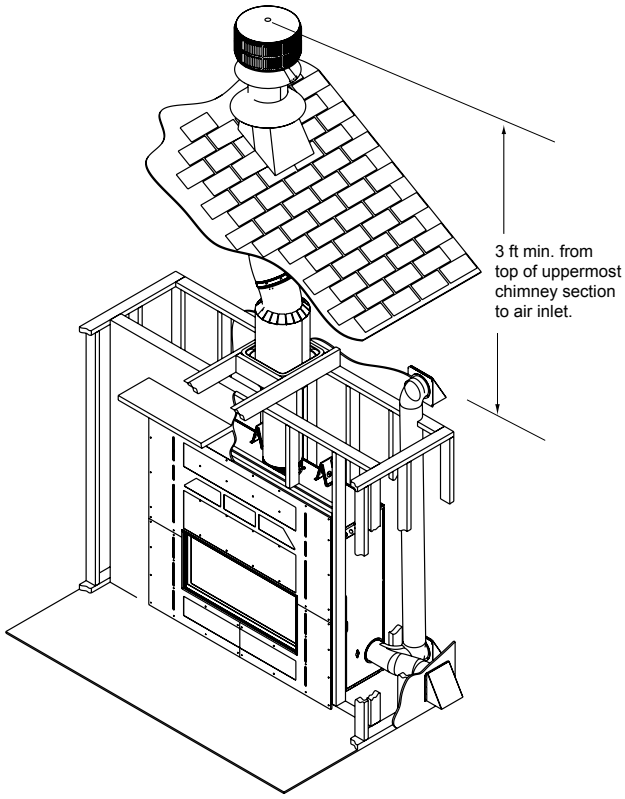

Figure 3.8 Outside Air Inlet Locations

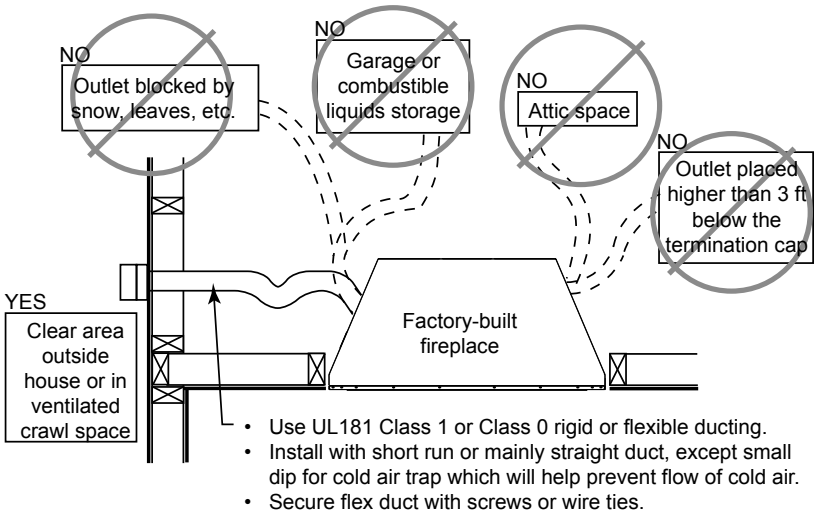

Figure 3.9 Outside Air Installation

H. Non-Combustible Facing Material Installation

WARNING! Risk of Fire!

- *Follow these instructions exactly.*
- *Facing materials must be installed properly to prevent fire.*
- *No materials may be substituted without authorization by Hearth & Home Technologies.*

Make sure the fireplace has been secured in place to the wall studs with the nailing flanges. (The fireplace can also be attached to the floor with L brackets that attached the fireplace to the pallet.)

- Slide the top board down the front of the unit and behind the flanges around the opening of the fireplace.
- Secure the board to the fireplace at the predrilled holes with the 1-1/4" inch screws provided. Attach the board to the framing members with regular sheetrock screws or nails.
- Slide the side boards in place from each side behind the flanges around the opening of the fireplace.
- Secure the board to the fireplace at the predrilled holes with the 1-1/4" inch screws provided. Attach the board to the framing members with regular sheetrock screws or nails.
- Use a wet or soft brush to remove dust or dirt from facing material.
- See section 7 for finishing materials guidelines.

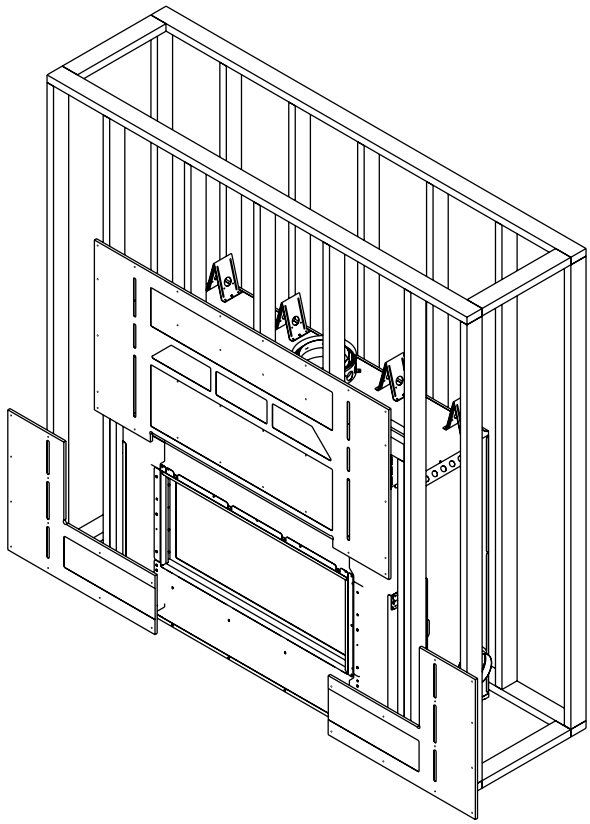

Figure 3.10 Non-Combustible Facing Material

4 Chimney and Termination Requirements

A. Chimney Requirements

Vertical distances are measured from the base of the fireplace as shown in Figure 4.1.

- Minimum overall straight height is 8 ft 8 in. if the fireplace is freestanding and a minimum of 10 ft from a combustible structure. See Figure 3.2.
- Chimney must extend 2 ft. (.6m) above any portion of the roof within 10 ft (3m) of the chimney. Refer to Figure 4.3.

Table 4.1 Chimney Requirements

Minimum overall straight height	*14 ft*	*4.28 m*
Minimum height with single offset/ return	*14 ft*	*4.28m*
Double offset/return minimum height	*16-1/2 ft*	*5.41 m*
Maximum height	*90 ft*	*27.43 m*
Maximum chimney length between an offset and return	*20 ft*	*6.1 m*
Maximum distance between chimney stabilizers	*35 ft*	*10.67 m*
Maximum unsupported chimney length between the offset and return	*6 ft*	*1.83 m*
Maximum unsupported chimney height above the fireplace	*35 ft*	*10.67 m*
Maximum unsupported chimney above roof	*6 ft*	*1.83 m*
Freestanding Unit (using (1) SL348)	*8 ft 8in.*	*2.64 m*

NOTICE: *A maximum of two pairs of offsets and returns may be used. Offsets may be used directly off the top of the fireplace.*

WARNING! Risk of Fire! *You must maintain 2 in. (51 mm) air space clearance to insulation and other combustible materials around the chimney system.*

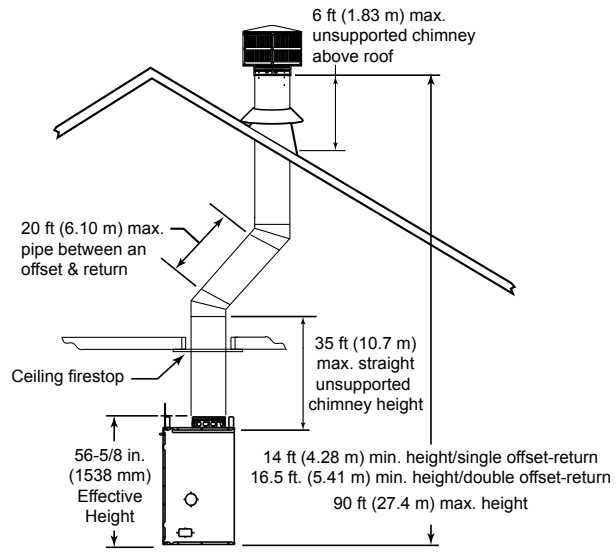

Figure 4.1 Chimney Requirements

NOTICE*: You must provide support for the pipe during construction and check to be sure inadvertent loading has not dislodged the chimney section from the fireplace or at any chimney joint.*

Table 4.2 Chimney Component Dimensions

HEIGHT OF CHIMNEY COMPONENTS		*in.*	*mm*
Chimney Stabilizer			
	SL3	4-3/4	121
Offsets/Returns			
	SL315	13-3/8	340
	SL330	15-1/2	394
Chimney Sections*			
	SL306	4-3/4	121
	SL312	10-3/4	273
	SL318	16-3/4	425
	SL324	22-3/4	578
	SL336	34-3/4	883
	SL348	46-3/4	1187

*** Dimensions reflect effective height.**

Section 4

B. Offsets/Returns

A 30° Elbow (measured from the vertical) is the largest that can be used in an offset. A 30° Elbow may not be combined with another Elbow to make a steeper offset (e.g. two 30° Elbows are not allowed to be put together to form a 60° elbow.). Avoid Elbows if possible. A totally vertical chimney is more efficient. When Elbows are necessary to avoid obstructions such as rafters, ridgepoles, or joists, you are only allowed to use 2 pair of Elbows in any one chimney system. Horizontal runs of chimney violate building code and are not allowed.

- An offset and return can be used as a single entity or separated by chimney section(s).

  ***WARNING! Risk of Fire! DO NOT** use offset/returns greater than 30° from vertical. Chimney draft will be restricted and could cause overheating and fire.*

- Measure the shift needed to avoid the overhead obstruction. Refer to dimension A in Figure 4.2.
- Find the appropriate A dimension listed in Table 4.3. The B dimension coinciding with the A dimension measurement in Table 4.3 represents the required vertical clearance needed to complete the offset/return.
- Read across the chart to find the number of chimney sections/model numbers needed between the offset and return.

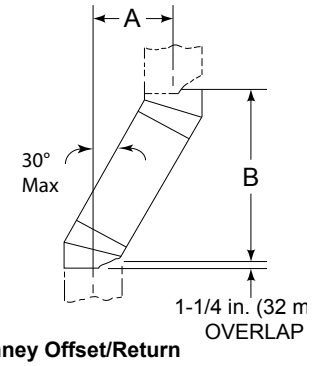

Figure 4.2 Chimney Offset/Return

Example:

Your "A" dimension from Figure 4.2 is 14 1/2 in. (368 mm). Using Table 4.3 the dimension closest to, but not less than 14 1/2 in. (368 mm) is 14 1/2 in. (368 mm) using a 30° offset/return.

You determine from the table that you need 34 1/8 in. (867 mm) (Dimension "B") between the offset and return.

The chimney component that best fits your application is one SL324.

Table 4.3 Offset Dimensions

15-degree				30-degree									
A		B		A		B							
in.	*mm*	*in.*	*mm*	*in.*	*mm*	*in.*	*mm*	SL306	SL312	SL318	SL324	SL336	SL348
1 5/8	41	13 3/8	340	3 5/8	92	15 1/2	394	-	-	-	-	-	-
2 7/8	73	17 3/4	451	5 1/2	140	18 5/8	473	1	-	-	-	-	-
4 1/8	102	22 3/8	568	7 1/4	184	21 3/4	552	2	-	-	-	-	-
4 1/2	114	23 5/8	600	8 1/2	216	23 3/4	603	-	1	-	-	-	-
5 3/4	146	28 1/4	718	10 1/4	260	27	686	1	1	-	-	-	-
6	152	29 3/8	746	11 1/2	292	29	737	-	-	1	-	-	-
7 1/4	184	34	864	13 1/4	337	32 1/8	816	-	2	-	-	-	-
7 3/4	197	36 1/8	918	14 1/2	368	34 1/8	867	-	-	-	1	-	-
8 3/4	222	39 3/4	1010	16 1/4	413	37 3/8	949	1	-	-	1	-	-
10 3/8	264	45 5/8	1159	19 1/4	489	42 1/2	1080	-	-	2	-	-	-
10 5/8	270	46 3/4	1187	20 1/2	521	44 5/8	1133	-	-	-	-	1	-
11 7/8	302	51 3/8	1305	22 1/4	565	47 3/4	1213	1	-	-	-	1	-
13 1/2	243	57 1/4	1454	25 1/4	641	52 7/8	1343	-	-	-	2	-	-
13 3/4	349	58 3/8	1483	26 1/2	673	55	1397	-	-	-	-	-	1
15	381	63	1600	28 1/4	718	58 1/8	1476	1	-	-	-	-	1
16 1/2	419	68 3/4	1746	31 1/4	794	63 1/4	1607	-	1	-	-	-	1
18	457	74 5/8	1895	34 1/4	870	68 1/2	1740	-	-	1	-	-	1
19 5/8	498	80 3/8	2042	37 1/4	946	73 3/4	1873	-	-	-	1	-	1
20 5/8	524	84 1/8	2137	39 1/8	994	76 7/8	1953	1	-	-	1	-	1
22 3/4	578	91 7/8	2334	43 1/4	1099	84 1/8	2137	-	-	-	-	1	1
24	610	96 1/2	2451	45 1/8	1146	87 1/4	2216	1	-	-	-	1	1
25 7/8	657	103 1/2	2629	49 1/4	1251	94 1/2	2400	-	-	-	-	-	2

Proper assembly of air-cooled chimney parts result in an overlap at chimney joints of 1-1/4 in. (32 mm). Effective length is built into this chart.

C. Termination Requirements

- Install a cap approved and listed for this fireplace system.
- Locate cap where it will not become plugged by snow or other materials.
- Locate cap away from trees or other structures.
- The bottom of the termination cap must be at least 3 ft (.91 m) above the roof AND at least 2 ft (.61 m) above any portion of roof within 10 ft (3.05 m).

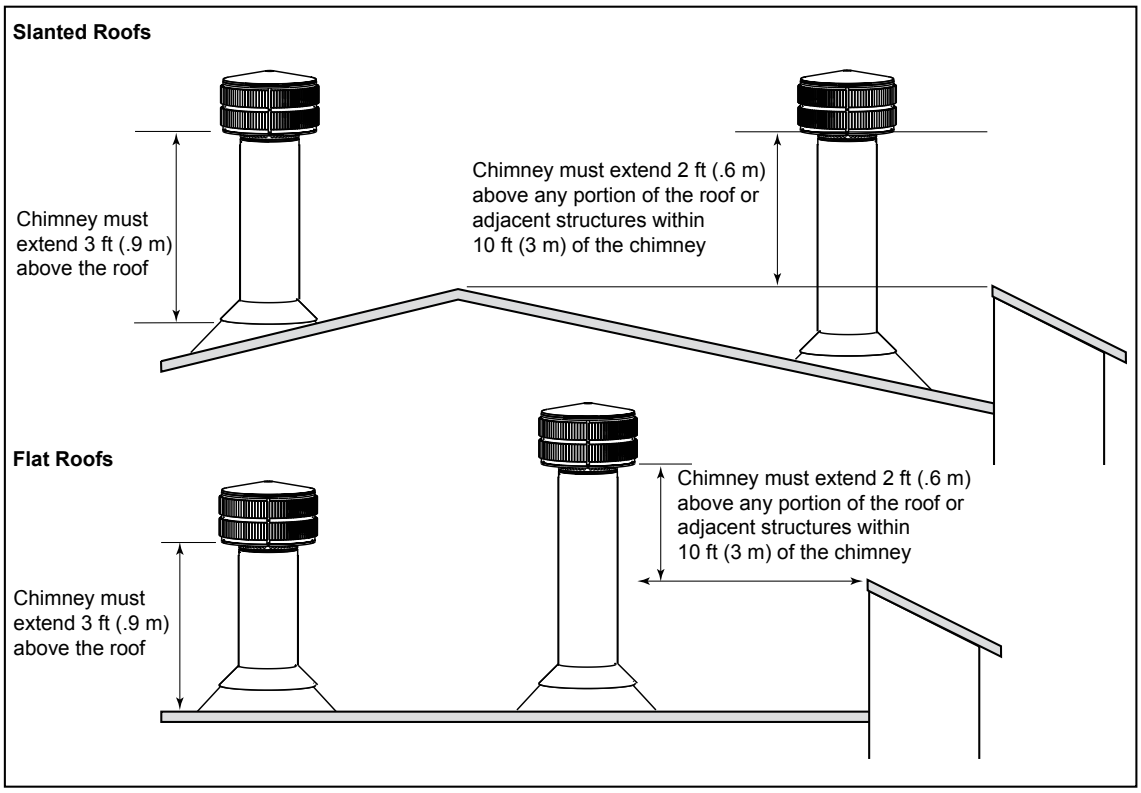

Figure 4.3 Multiple Chimney Locations

5 Chimney Installation

A. Typical Chimney System

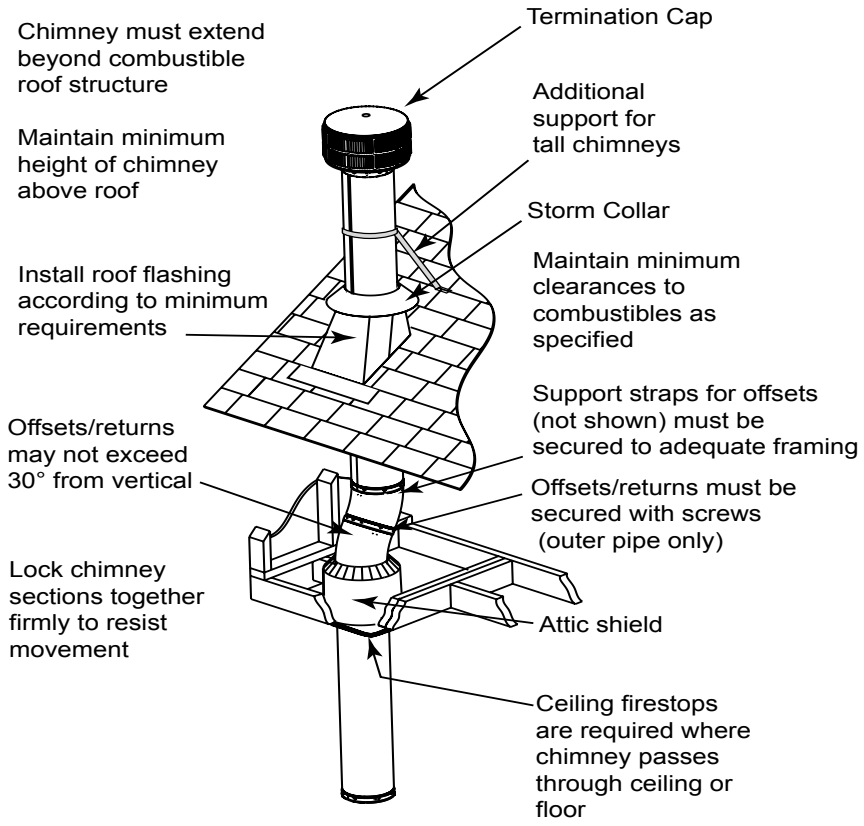

Figure 5.1 Typical Chimney System - Attic Shield Application

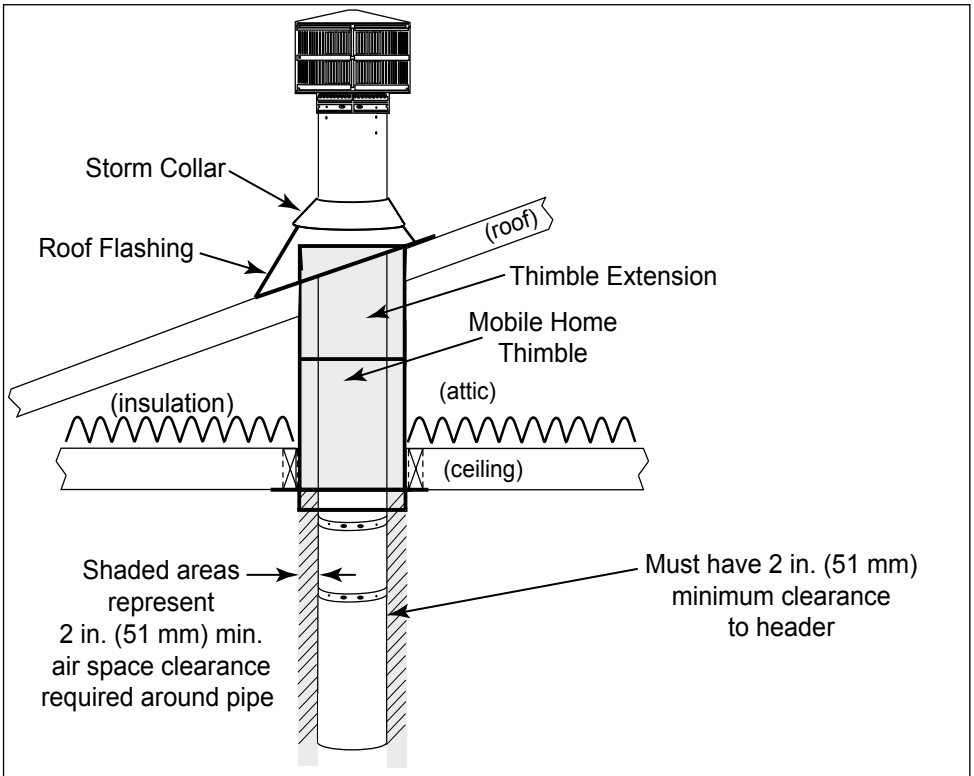

Figure 5.2 Typical Chimney System - Thimble Application For Manufactured Housing

B. Assemble Chimney Sections

***WARNING! Risk of Fire! DO NOT** install substitute or damaged chimney components.*

Use only those components described in this manual.

Attach either a straight chimney section or an offset to the top of the fireplace starting with the inner flue followed by the outer casing. Continue this order until termination cap is reached (depending on your installation requirement). Chimney sections are locked together by pushing downward until the top section meets the stop bead on the lower section.

The inner flue is placed to the inside of the flue section below it. The outer casing is placed outside the outer casing of the chimney section below it. See Figure 5.3.

***NOTICE:** Chimney sections cannot be disassembled once locked together. Plan ahead!*

- Lock chimney sections and/or offsets/returns together by pushing downward until the top section meets the stop bead on the lower section.
- Pull on the top of each section as installed to make sure it is fully engaged and will not separate.
- You may use #6 or #8 sheet metal screws no longer than 1/2 in. (13 mm) to fasten chimney outer sections together. Do NOT penetrate inner flue.
- Vertical straight runs of chimney must be supported every 35 ft (10.7 m).

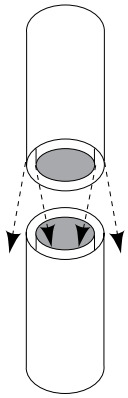

Figure 5.3 Assembling Chimney Sections

C. Secure Offset/Return

WARNING! Risk of Fire!

- *Secure offsets with screws (not to exceed 1/2 in./13 mm In length).*
- *Secure returns with strapping.*
- *Straight chimney sections may be secured with screw (not to exceed 1/2 in./13 mm In length) at the joints.*
- *Keep chimney sections from separating or twisting.*

When offsets and returns are joined to straight pipe sections, they must be locked into position with the screws (outer only). To prevent the chimney sections from from pulling apart, the returns and the chimney stabilizers have hanger straps for securing these parts to joists or rafters. See Figure 5.4.

* Use # 6 or # 8 sheet metal screw, or larger, no longer than 1/2 in. (13 mm).

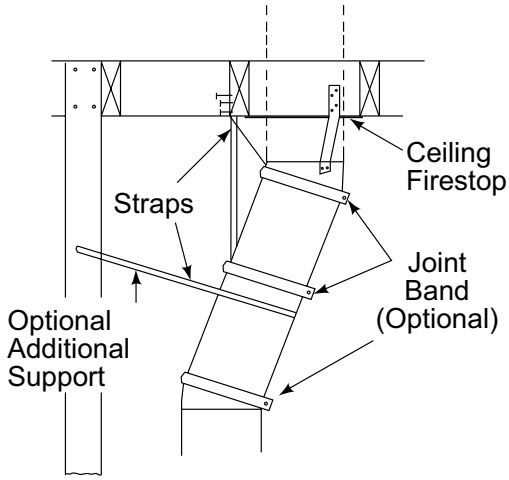

Figure 5.4 Secure the Chimney

Section 5

D. Install Firestops

WARNING! Risk of Fire! *Firestops must be used whenever the chimney penetrates a ceiling/floor.*

- Mark and cut an opening in ceiling/floor as shown in Figure 5.5.
- Frame the opening.
- Nail the firestop to the bottom of the ceiling/floor joists.
- Provide a means to maintain the required air space between the chimney and insulation or install an attic insulation shield.

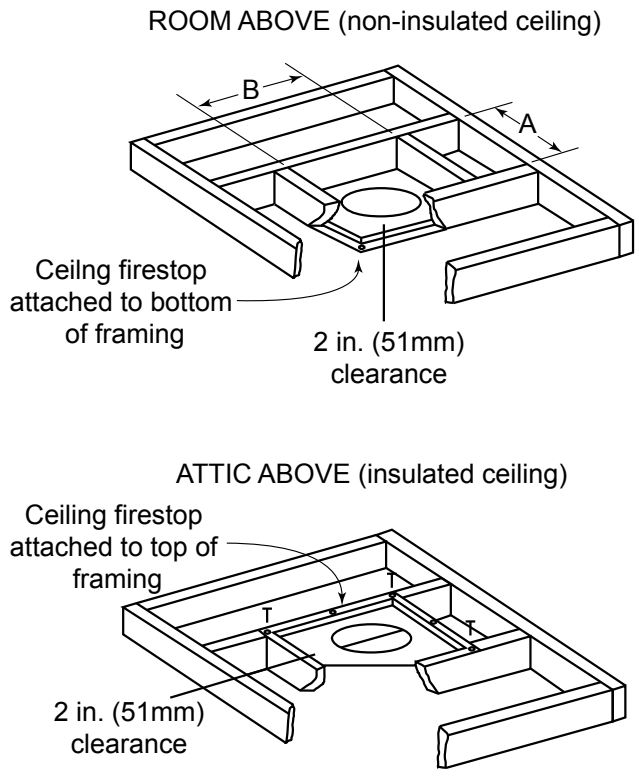

Note: Use same dimensional lumber for framing ceiling firestop and joists.

	A		B	
Catalog #	*in.*	*mm*	*in.*	*mm*
FS338	14-1/2	368	14-1/2	368
FS339	14-1/2	368	18-3/8	467
FS340	14-1/2	368	23	584

Figure 5.5 Installing the Ceiling Firestop

WARNING! Risk of Fire! DO NOT *seal area between firestop opening and chimney pipe except where they enter the attic or leave the warm air envelope of the home (use 600° F sealant).*

E. Install Attic Insulation Shield Provided

WARNING! Risk of Fire! *You MUST install the attic insulation shield in attic or chase installation.*

- ***DO NOT*** *pack insulation between the chimney and the attic insulation shield.*
- *Failure to keep insulation and other materials away from chimney pipe could cause fire.*
- ***DO NOT*** *offset chimney inside insulation shield.*

Refer to Figures 5.5, 5.6, 5.7.

If the attic shield is pre-rolled continue. If it is a flat part, try and roll it up to aid in wrapping it around the chimney.

Pre-bend all the tabs in at the top to 45°.

- Wrap the shield (around the chimney if already installed) until you have an overlap and the three holes on each side match up (large holes on top).
- Insert three screws into the matching holes to form a tube starting at the bottom.
- Bend the tabs on the bottom of the tube inward to 90° to maintain chimney air space.
- Rest the insulation shield on the ceiling firestop below.

Tape off any opening around the bottom.

When making a custom shield or barrier, follow these guidelines and code requirements:

- Metal is preferred, although any material stiff enough to hold back the insulation can be used.
- Use of cardboard or other materials that can deflect under humidity or other environmental conditions is not allowed. The shield or barrier must be tall enough to extend above the insulation and prevent blown-in insulation from spilling into the cavity.
- Maintain specified air spaces around chimney.

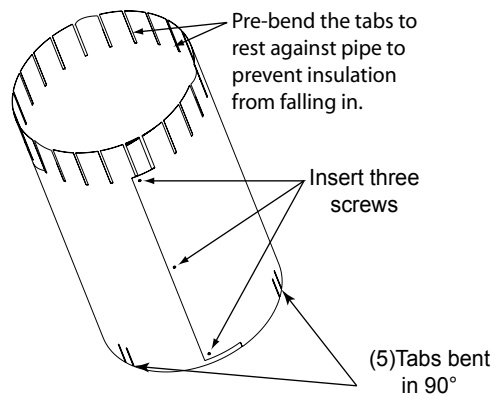

Figure 5.6 Prepare Attic Insulation Shield

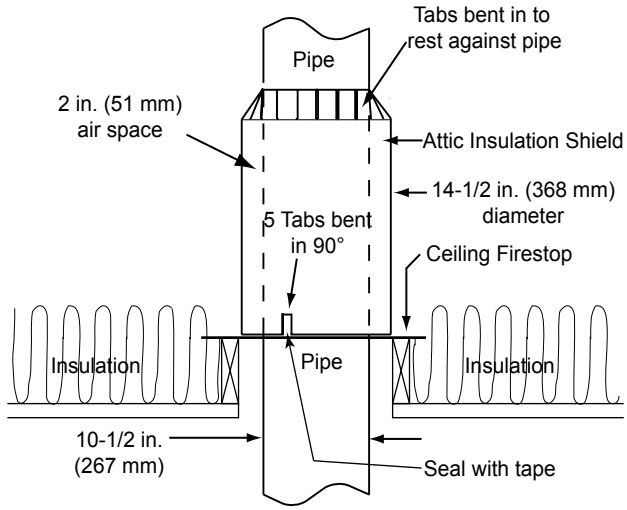

Figure 5.7 Install Attic Insulation Shield (firestop above ceiling)

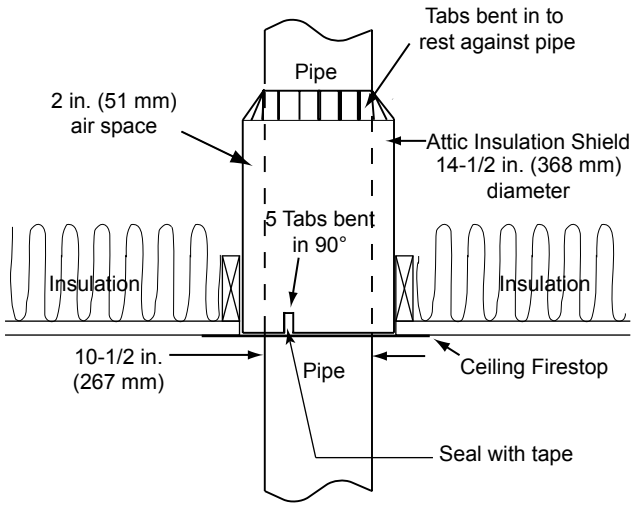

Figure 5.8 Install Attic Insulation Shield (firestop below ceiling)

F. Thimble Installation - Manufactured Housing

ATTIC INSULATION SHIELD NOT REQUIRED WHEN THIMBLE APPLICATION IS USED.

- The thimble must extend completely through the roof structure shielding combustible materials. Five location holes have been provided to allow for a variety of ceiling/roof thicknesses. The thimble extension is required when the ceiling/roof thickness exceeds 12 1/2 in. The extension should overlap the thimble 1 in.
- Drill 1/8 in. holes through the outer shield of the thimble using the predrilled holes in the extension as guides. Attach the extension to the thimble using the screws provided with the extension.
- Install the thimble assembly and nail/screw it securely to the framing members.
- Center the flashing over the chimney and fasten it appropriately to the roof using nails or screws. Keep gaps between the flashing plate and the roof to a minimum.
- Caulk the flashing plate and roof junction as well as the vertical seam on the flashing. All nail/screw heads must be caulked with a roofing sealant.
- Finish assembling the chimney, storm collar and termination cap following the installation instructions provided with them.

NOTE: *Roofing shingles must be below the flashing plate on the lower side of a sloped roof and over the flashing plate on the sides and top.*

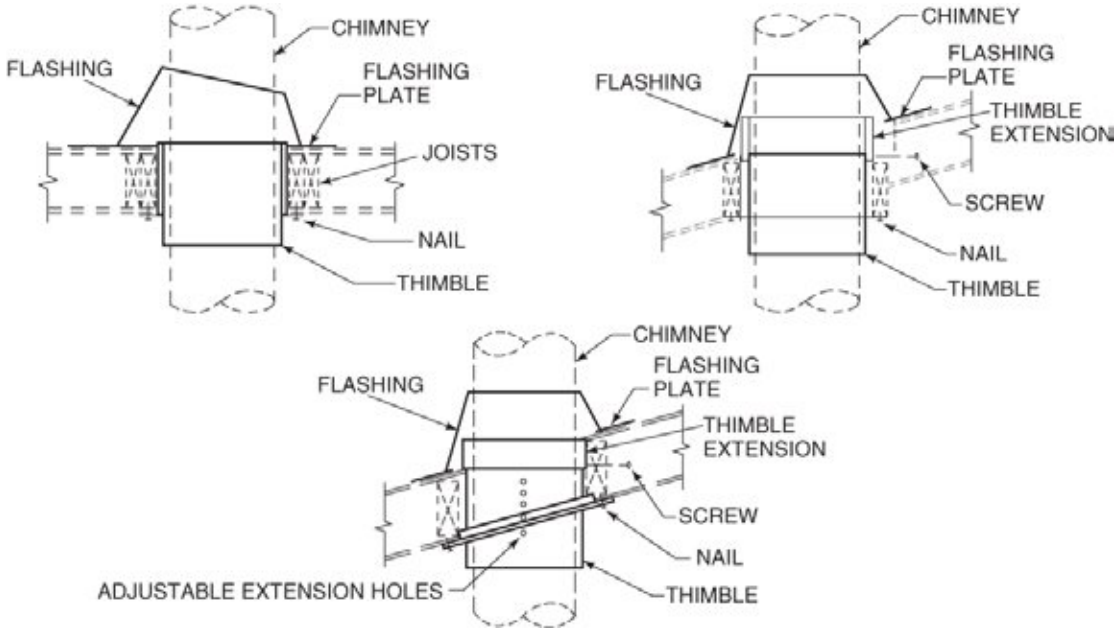

Figure 5.8 MH Thimble Installation

G. Roof Penetration

- Refer to Figure 5.9.
- Plumb from roof to center of chimney.
- Drive a nail up through roof to mark center of pipe.
- Measure to either side of nail and mark the 14-1/2 in. x 14-1/2 in. (368 mm x 368 mm) opening required.
- Measure opening on the horizontal; actual length may be larger depending on roof pitch.
- Cut out and frame opening.

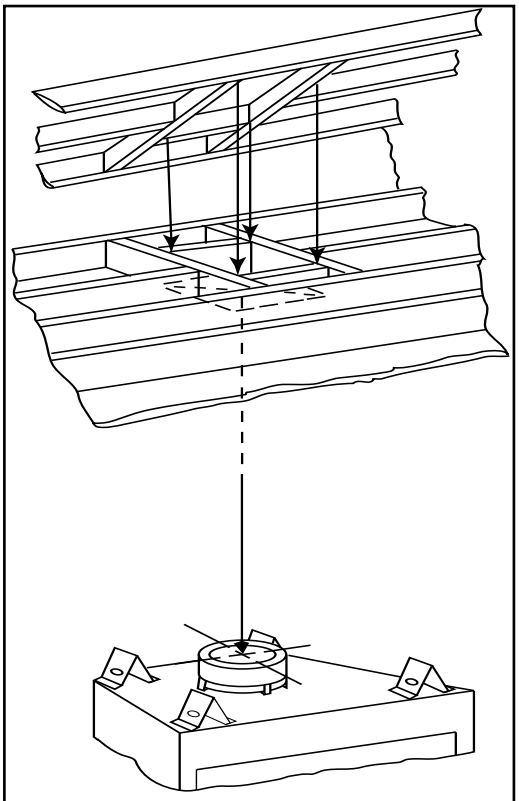

Figure 5.9 Ceiling/Attic Construction

Install Flashing

- Assemble chimney so it passes through the framed opening.
- Slip the flashing over the chimney.

NOTICE: *Roofing shingles must be below the flashing plate on the lower side of a sloped roof and over the flashing plate on the sides and top.*

- Nail the flashing to the roof. Keep gaps between the flashing plate and the roof to a minimum.
- Caulk the flashing plate and roof junction as well as the vertical seam on the flashing. All nail heads must be caulked with a roofing sealant.
- Caulk the overlap seam of any exposed pipe sections that are located above the roof line to prevent leaks.

H. Install Chase Top

WARNING! Risk of Fire! DO NOT *caulk the pipe to the chase top collar.*

- You MUST use a chase top in a chase installation. Chase tops may be field constructed.
- Include a turndown and drip edge to prevent water from seeping into the chase.
- Include a 2 in. (51 mm) soldered, welded or spun collar around pipe opening to keep water out.
- Provide a 1/8 in. (3 mm) gap around the flue pipe.
- Slope the chase top downward away from the opening.
- Caulk all seams to prevent leaks.

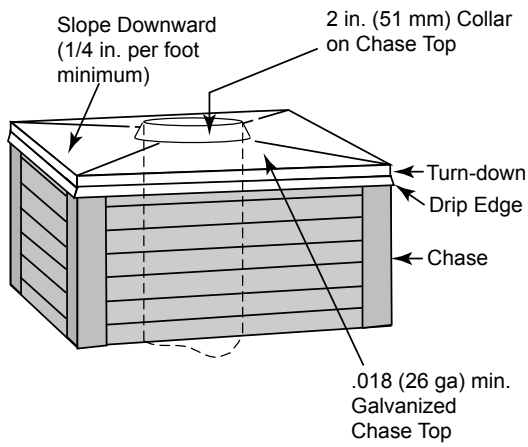

Figure 5.10 Chase Top Construction

I. Install Termination Cap

WARNING! Risk of Fire! *The minimum overlap of cap to pipe (as shown in the following illustrations) MUST be met or chimney may separate from cap. Separation allows sparks, heat and embers to escape.*

Install the chimney sections up through the chase enclosure.

- Caulk the overlap seam of any exposed pipe sections that are located above the roof line to prevent leaks.
- Refer to termination cap instructions.
- Paint the chimney system above the roof line to improve asthetics and corrosion resistance.

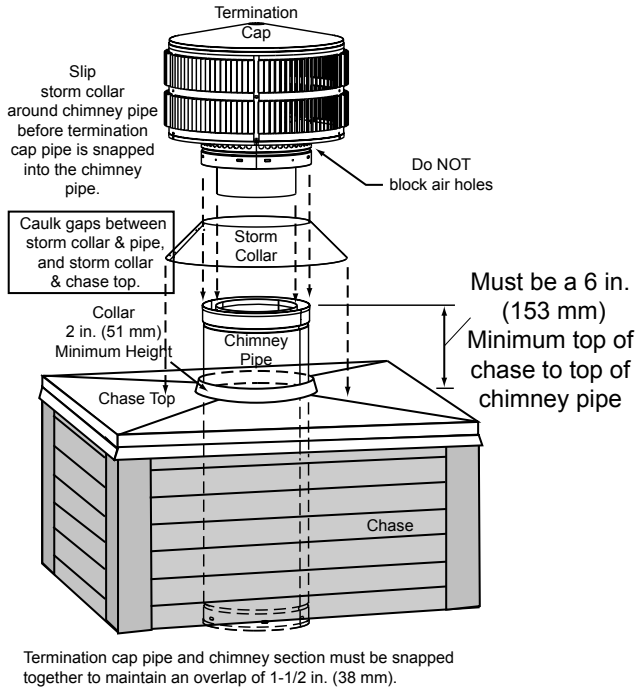

Figure 5.11 Installing a TR344 Round Termination Cap

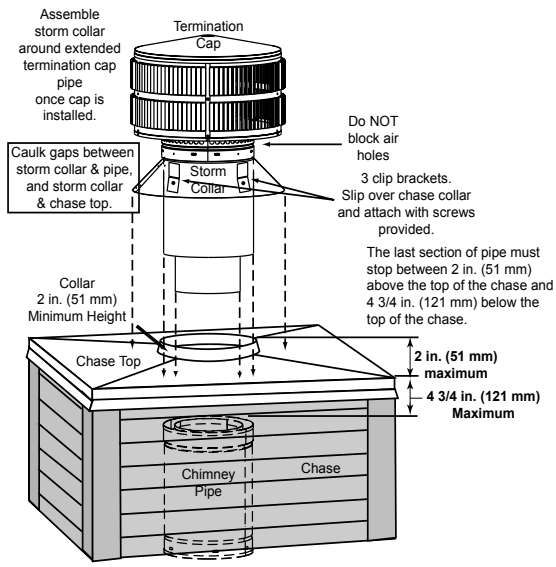

Figure 5.12 Installing a TR342-B Round Telescoping Termination Cap

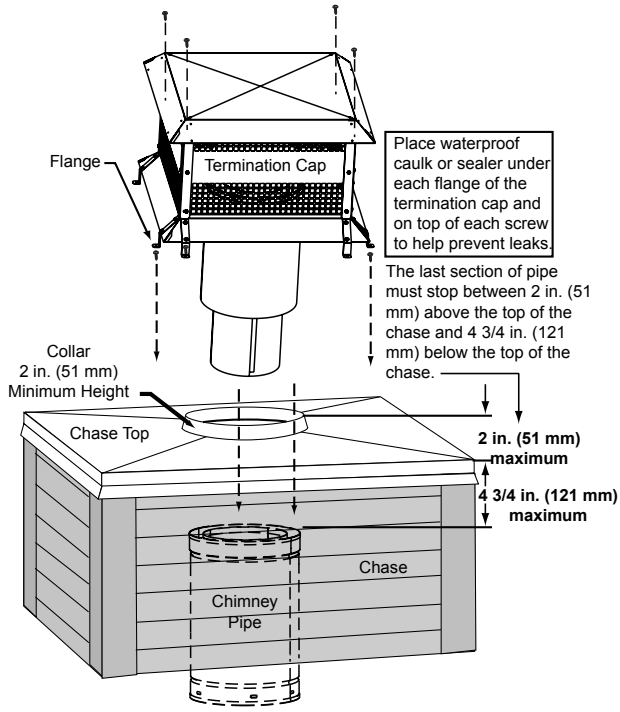

Figure 5.13 Installing an ST375 Square Termination Cap

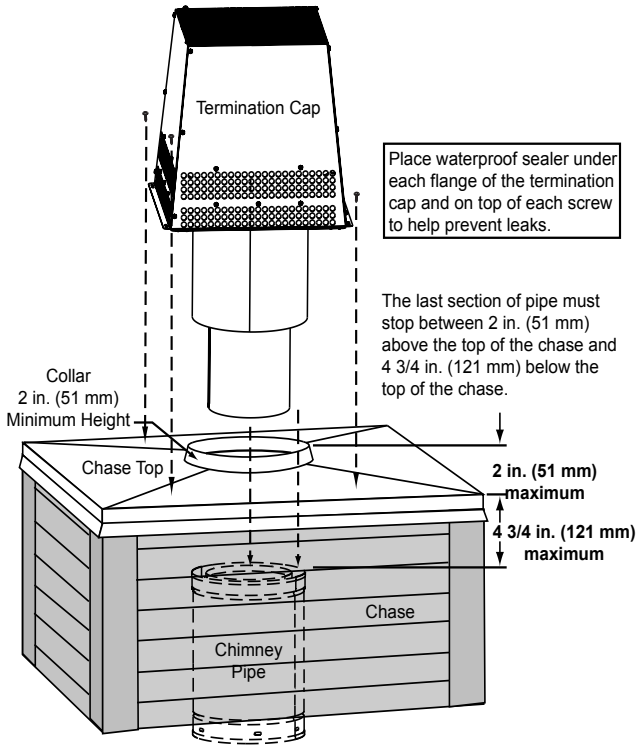

Figure 5.14 Installing a TS345/TS345P Square Termination Cap

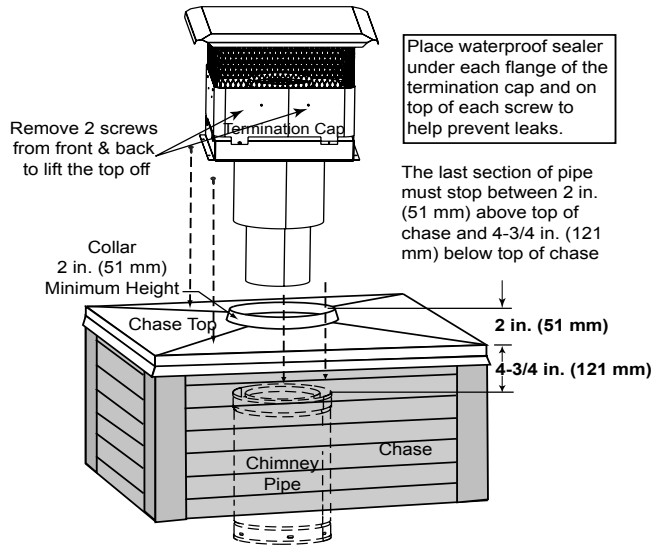

Figure 5.15 Installing a TCT375 Terra Cotta Cap

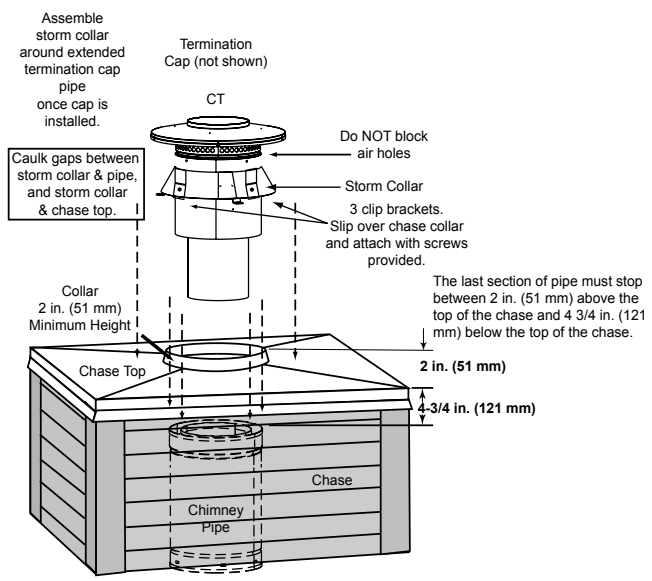

Figure 5.16 Installing CT-3A-B Adapter

6 Shrouds

WARNING! Risk of Fire! *Shrouds and Radiation Shields must be constructed as specified. Improper construction may overheat chase top.*

NOTICE: Shrouds may be field constructed where permitted by regional building codes. Consult your local building officials.

The shrouds and radiation shield must be constructed from minimum .018 in. (26 ga) thick aluminized or stainless steel. Galvanized is not recommended due to corrosion concerns.

A. Radiation Shield

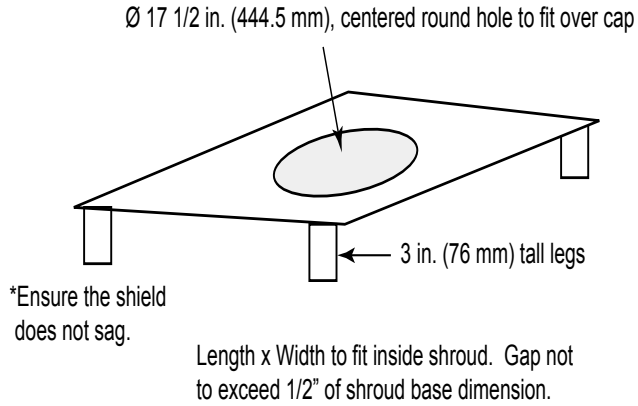

Figure 6.1 Radiation Shield

B. Field Constructed Shrouds

The following field constructed shroud designs are approved for HHT fireplace systems and termination caps.

For shroud designs with multiple terminations contact your authorized HHT dealer.

1. Open Top Shroud

TR342B/344 TV (top vent) caps do not require radiation shield.

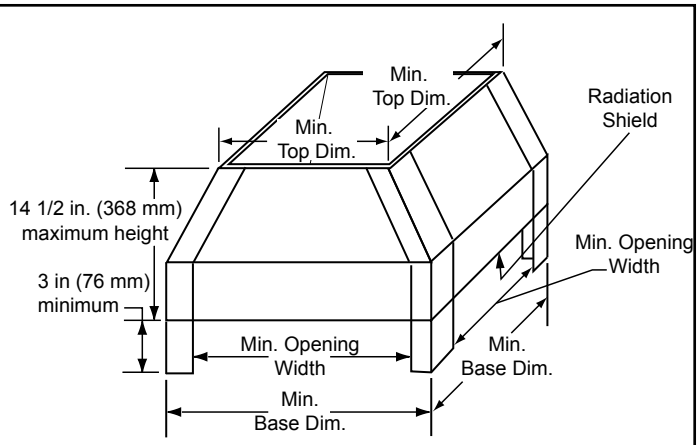

	TS345	TR344 TR342B	TR342B/TR344 with TR-TVK
Min. Base Dims.			
in	23 x 23	28 x 28	26 x 26
mm	584 x 584	711 x 711	660 x 660
		Radiation Shield Required	Radiation Shield Not Required
Min. Top Dims.			
in	20 x 20	25 x 25	23 x 23
mm	508 x 508	635 x 635	584 x 584
Min. Opening Width			
in	17 x 17	22 x 22	20 x 20
mm	432 x 432	559 x 559	508 x 508

Figure 6.2 Open Top Shroud

TR caps require radiation shield unless installed partially above the shroud or using a TR-TVK. The TR cap must be raised to the minimum dimensions (or greater) above the shroud. Refer to Figure 6.3.

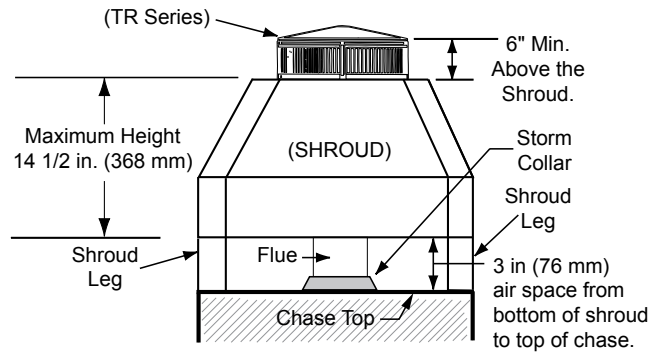

Figure 6.3 Shroud & TR Series cap with no Radiation Shield

Section 6

2. Mailbox Style Shroud

Radiation shield required

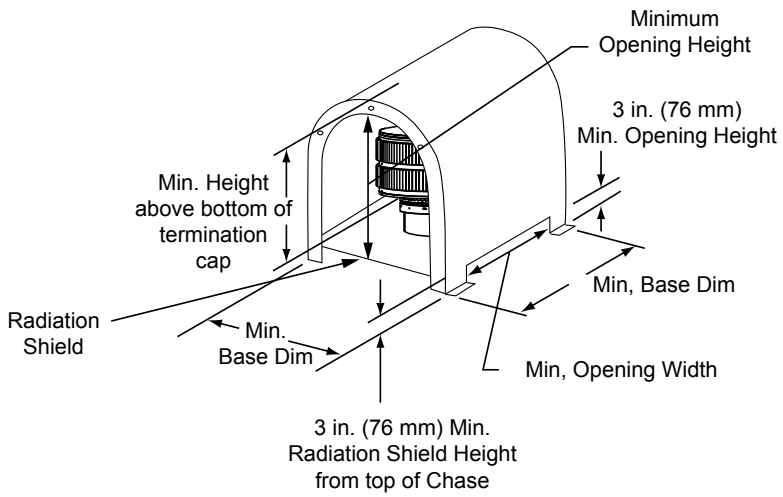

	TR344 TR342-B	TR342-B TR344/ with TR-TVK
Min. Base Dims.		
in	26-1/2 x 28	28 x 30
mm	673 x 711	711 x 762
Min. Height Above Bottom of Termination Cap		
in	28-1/4	27-1/2
mm	718	698
Min. Opening Width		
in	20-1/2	22
mm	521	559
Min. Opening Height		
in	18-1/4	17-1/2
mm	464	445

Figure 6.4 Mailbox Style Shroud Dimensions

3. Roofed Style Shroud

Radiation shield required

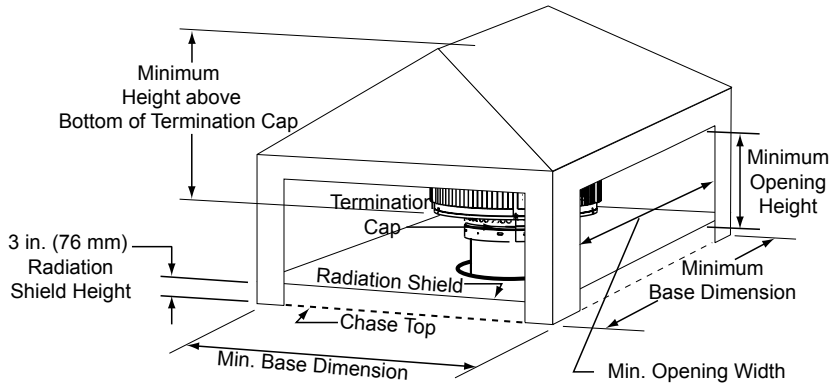

TR342B/344 TR442B/444 or with TR-TVK	
Min. Base Dims.	
in	27 x 27
mm	686 x 686
Min. Height Above Bottom of Termination Cap	
in	23
mm	584
Min. Opening Width	
in	21
mm	533
Min. Opening Height	
in	12
mm	305

Figure 6.5 Roofed Style Shroud

7 Facing, Mantels and Hearth Extensions

A. Facing and Finishing Instructions

WARNING! Risk of Fire! *DO NOT remove the installed non-combustible board or cover it with combustible material, such as:*

- *Drywall (gypsum board)*
- *Plywood*
- *Materials that do not meet the ASTM E 136 Non-combustibility standard (below).*

Removal of installed, non-combustible board and/or use of materials not meeting the ASTM E 136 standard could cause fire.

Wall sheathing materials 1/2 in. thick are specified in this installation manual to properly align with the installed non-combustible material.

When finishing the wall around the fireplace, it is critical that wall sheathing be fastened properly.

It is acceptable to pre-drill holes and use self-tapped screws in designated areas in the installed non-combustible board which may be used to secure lathe (a backer for tile, marble, etc.). Screws being installed through the installed non-combustible board should be self-tapping type with a maximum length of 1-1/4 inches. See Figure 7.1.

Non-Combustible Materials Specification

Material which will not ignite and burn. Such materials are those consisting entirely of steel, iron, brick, tile, concrete, slate, glass or plasters, or any combination thereof.

Materials that are reported as passing **ASTM E 136, Standard Test Method for Behavior of Materials in a Vertical Tube Furnace at 750 ºC.**

Finishing Materials

NOTICE: The finishing material not only includes the decorative finish materials (marble, tile, slate, etc) but also the thin set, lath and adhesive used to attach the decorative finish material.

Finish and Sealing Joints

All joints between the finished wall sheathing and the appliance must be sealed with non-combustible materials. Sealants, such as caulk or mastic used to seal the gap between the wall and the fireplace, should be rated at a minimum continuous exposure to 300ºF.

Gypsum wallboard (drywall) joints adjacent to the fireplace non-combustible board on the appliance, require special attention to minimize cracking.

Tape wall board joints around the fireplace non-combustible board with fiberglass-mesh tape. It will provide a more crack-resistant joint than paper tape. Fill, smooth and finish wall joints with quick set joint compound for first coat. It will provide a more crack-resistant joint than air-drying lightweight compound.

In regards to the sheetrock mud, a smooth, even surface, covering a wide area of the wall is desired for best results. For best results, follow the tips below.

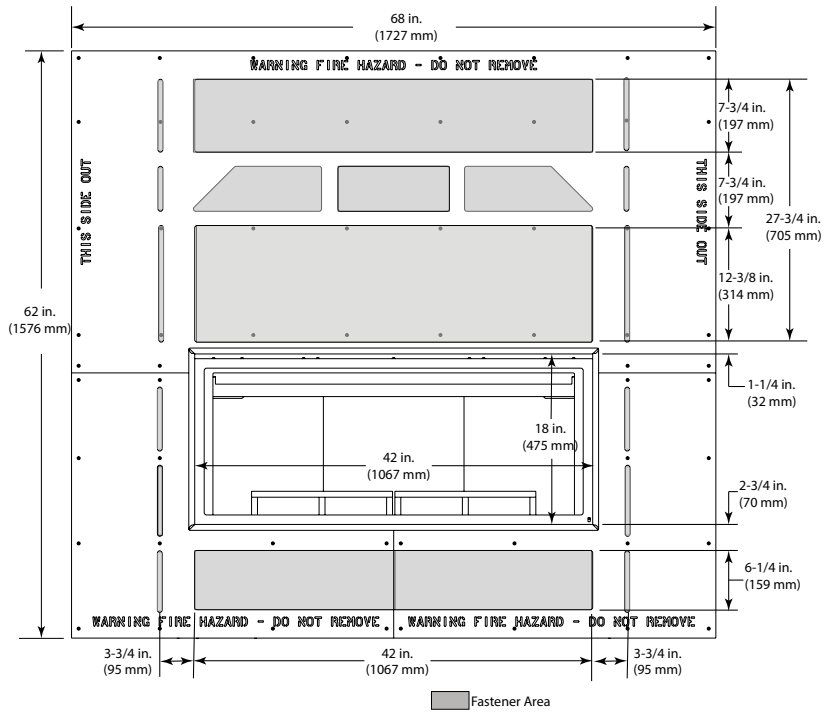

Figure 7.1 Designated Fastener Area

Section 7

To Reduce the Risk of Sheetrock Cracking Finish With:
All purpose joint compound.
Eggshell paint (gloss or semi-gloss).

Facing Material

- Facing and/or finishing materials must never overhang into the glass opening.
- Observe all clearances when applying combustible materials.

Painting

If desired finishing includes a painted wall, 100% acrylic latex with compatible primer is recommended around this appliance. Oil-based or standard acrylic paints may discolor due to heat exposure.

Table 7.1

R = 1/k x inches of thickness

Table 7.2

Hearth Extension Insulation Alternatives-Total minimum R Value must equal 1.03			
Material	**k per inch thick**	**r per inch thick**	**Minimum thickness required**
Hearth & Home HX3, HX4, Micore 300™	0.49	2.06	1/2 in.
USG Micore 160™	0.39	2.54	1/2 in.
Armstrong™ Privacy Guard Plus	0.46	2.18	1/2 in.
USG Durock™ Cement Board	1.92	0.52	2 in.
Cement Mortor	5.0	0.20	5-1/8 in.
Common Brick	5.0	0.20	5-1/8 in.
Ceramic Tile	12.50	0.08	12-1/4 in.
Marble	14.3-20.0	0.07-0.05	14-5/8 in. - 20-3/8 in.

B. Hearth Extension, Construction and Finishing

WARNING! Risk of Fire! *High temperatures, sparks, embers or other burning material falling from the fireplace may ignite flooring or concealed combustible surfaces.*

- *Protective metal hearth strips MUST be installed if sitting on combustible surface.*
- *Hearth extensions are to be installed only as illustrated to prevent high temperatures from occurring on concealed combustible materials.*

A hearth extension must be installed with all fireplaces to protect the combustible floor in front of the fireplace from both radiant heat and sparks.

- You MUST use a hearth extension with this fireplace.
- Refer to Figure 7.2 for minimum dimensions.
- This fireplace has been tested and approved for use with a hearth extension insulated to a minimum R value of 1.03.
- The hearth extension material MUST be covered with tile, stone or other non-combustible material.
- Manufactured hearth materials will usually have a published **R value** (resistance to heat) or **k value** (conductivity of heat). Refer to the formula in Table 7.1 to convert a k value to an R value.
- The hearth extension construction may consist of using one or more sources of material as long as the R value is attained. See Table 7.2 and Figure 7.3.
- Refer to Table 7.2 for hearth extension insulation alternatives.

NOTICE: *Hearth & Home Technologies is not responsible for discoloration, cracking or other material failures of finishing materials due to heat exposure or smoke. Stainless steel will discolor with temperature.*

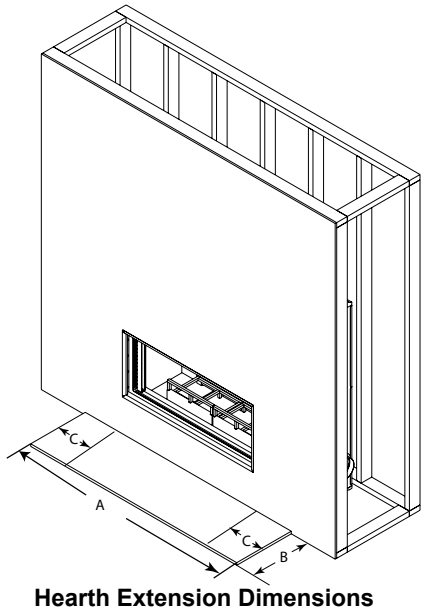

Hearth Extension Dimensions

Model #		A	B	C
LM42	*in.*	58	16	8
	mm	1473	406	203

Figure 7.2 Hearth Extension Dimensions

1. If the hearth extension is more than 12 inches below the fireplace opening an insulation barrier is not required but must be made of tile, stone, or other non-combustible material.

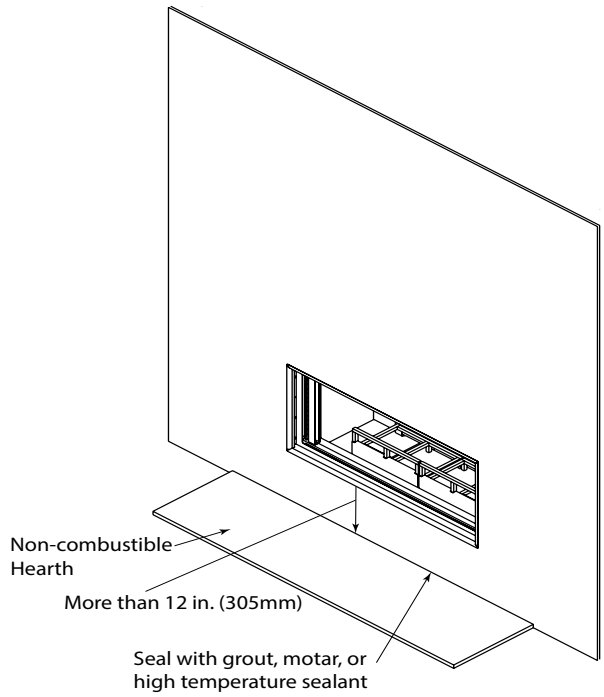

Figure 7.3

2. If the hearth extension is flush or less than 12 inches below the fireplace opening, the structure must be made of all non-combustible material (such as metal framing or equivalent material) and sitting on 1/2 in. Micore or other material with an R value of 1.03.

When creating the platform, allow for the thickness of the non-combustible finished materials.

Seal gaps between the hearth extension and the front of the fireplace with a bead of non-combustible sealant or grout.

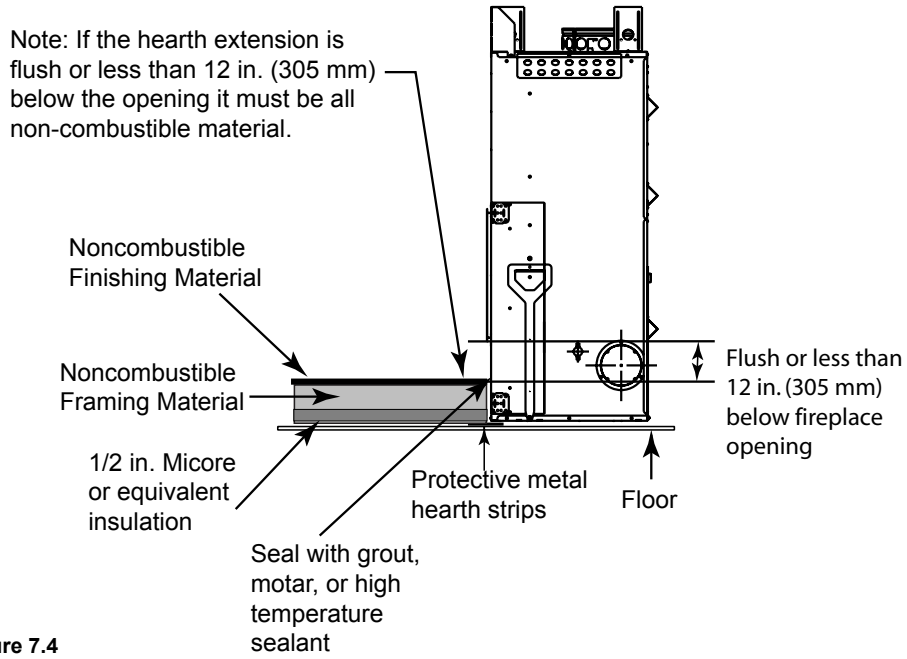

Figure 7.4

C. Mantel and Wall Projections

Combustible trim pieces that project no more than 1-1/2 in. (38 mm) from the face of the fireplace can be placed no closer than 8 in. (203 mm) from the top of the fireplace opening.

Combustible trim must not cover the metal surfaces of the fireplace.

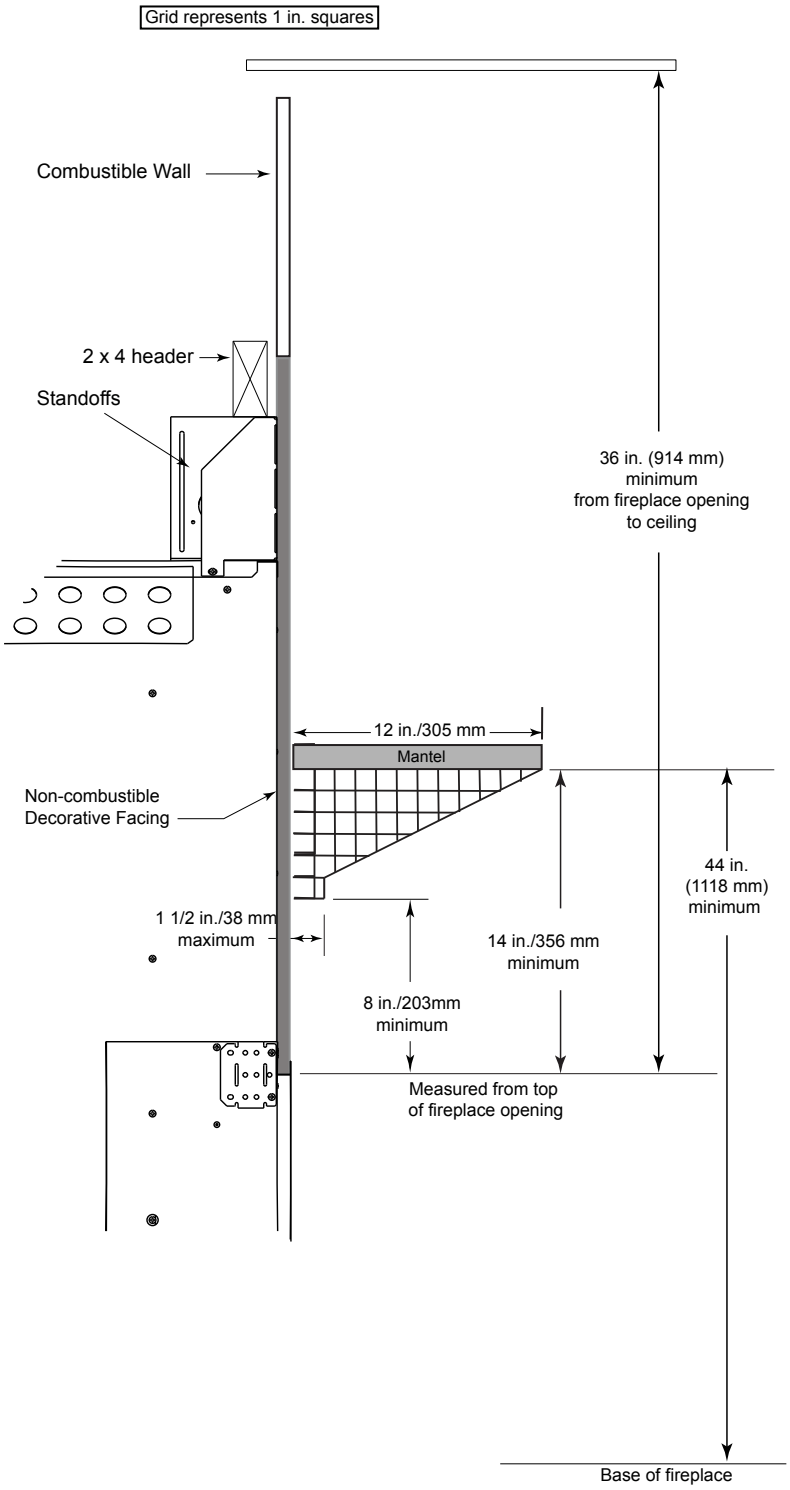

Figure 7.5 Mantel Specifications

D. Sidewalls/Surrounds

- Locate adjacent combustible sidewalls a minimum of 12 in. (305 mm) from fireplace opening.
- Mantle leg, surround, stub wall, whether combustible or non-combustible, may be constructed as shown in Figure 7.6.

Model #		A Fireplace Opening	B Outside Dimensions
LM42	*in.*	42	62
	mm	1067	1575

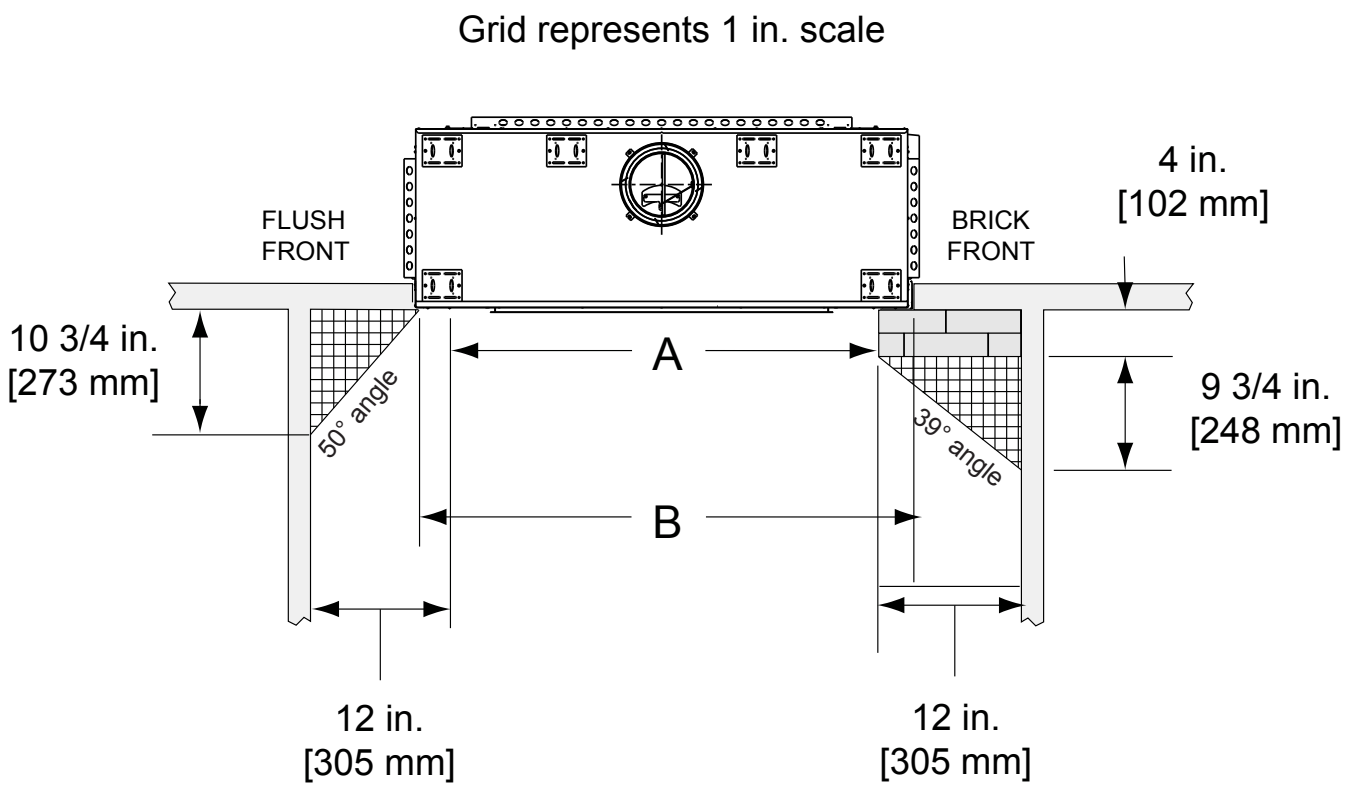

Figure 7.6 Mantel Leg, Surround or Wall Projection (acceptable on both sides of opening)

8 Fireplace Accessories

A. Gas Log/Lighter Provision

WARNING! Fire and/or Asphyxiation Risk! *Use with solid wood fuel or decorative gas logs only. Gas fire generates fumes.*

- ***DO NOT*** *install unvented gas logs*
- *Damper must be locked fully open when gas logs are installed*
- *Read and follow gas log instructions*

WARNING! *THIS FIREPLACE HAS NOT BEEN TESTED WITH AN UNVENTED GAS LOG SET. TO REDUCE RISK OF FIRE OR INJURY, DO NOT INSTALL AN UNVENTED GAS LOG SET INTO THIS FIREPLACE.*

CAUTION! Risk of Fire! *WHEN USING THE DECORATIVE LOG SET, THE FIREPLACE DAMPER MUST BE SET IN THE FULLY OPEN POSITION.*

A certified gas log lighter or decorative gas log set can be installed in this fireplace.

- Maximum input is 100,000 BTU/hr.
- Decorative gas appliance must be certified to **ANSI Z21.60/CSA 2.26** "Standard for Decorative Gas Appliances for Installation in Vented Fireplaces".
- Must be installed in accordance with the **National Fuel Gas Code, ANSI Z223.1 and Natural Gas Installation Code, CAN/CGA-B149.1-M95 or the Propane Installation Code, CAN/CGA-B149.2-M95.**
- A gas log set must incorporate a gas shutoff.
- Gas Log set requires the damper to be locked fully open.
- Gas Knockouts are provided on both sides of the fireplace and in refractories for 1/2 in. iron pipe.
  Remove side refractories and turn end for end to show knockouts.
- Seal refractory around pipe with fireplace mortar or a non-combustible sealant.

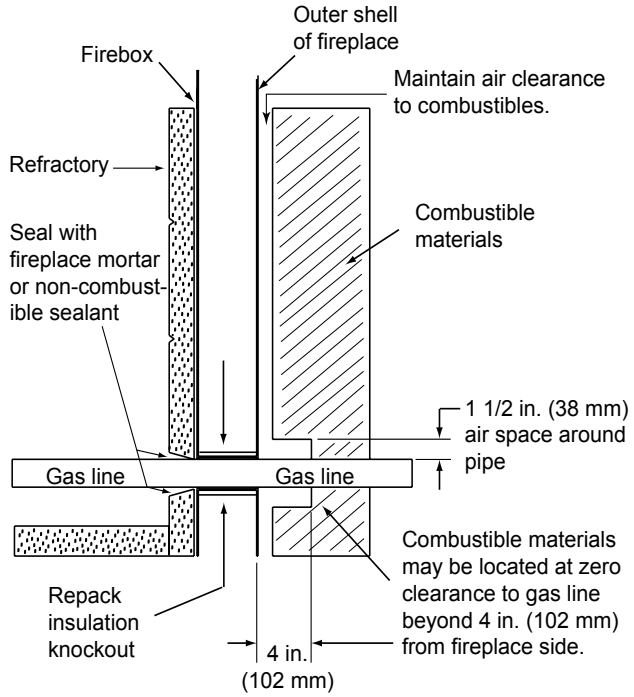

Figure 8.1 Gas Line Installation

Gas Log Sets

Gas Log Lighters

Section 8

9 Reference Materials

A. Chimney Components

Catalog #	Description
CAK4A	Chimney Air Kit
ID4/ID6	Insulated Duct/Outside Air
UD4/UD6	Uninsulated Duct/Outside Air
SL306	Chimney Section - 6 in. (152 mm) long
SL312	Chimney Section - 12 in. (305 mm) long
SL318	Chimney Section - 18 in. (457 mm) long
SL324	Chimney Section - 24 in. (610 mm) long
SL336	Chimney Section - 36 in. (914 mm) long
SL348	Chimney Section - 48 in. (1219 mm) long
SL3	Chimney Stabilizer
SL315	Chimney Offset/Return - 15 deg
SL330	Chimney Offset/Return - 30 deg
FS338	Ceiling Firestop - Straight
FS339	Ceiling Firestop - 15 deg
FS340	Ceiling Firestop - 30 deg
AS8	SL300 Straight Attic Insulation Shield, 24 in. (610 mm)
JB877	Chimney Joint Band
CB876	Chimney Bracket
RF370	Roof Flashing - Flat to 6/12 Pitch
RF371	Roof Flashing - 6/12 to 12/12 Pitch
TR344	Round Termination Cap
TR342-B	Round Telescoping Termination Cap
ST375	Square Termination Cap
TS345	Square Termination Cap
TS345P	Square Termination Cap - Painted
TCT375	Terra Cotta Termination Cap
TR-TVK	TR Top Vent Kit
DTO134	Short Octagon Decorative Cap
DTO146	Tall Octagon Decorative Cap
DTS134	Short Square Decorative Cap
DTS146	Tall Square Decorative Cap
LDS33	Decorative Shroud - 3 ft x 3 ft (.91 m x .91 m)
LDS46	Decorative Shroud - 4 ft x 6 ft (1.22 m x 1.83 m)
LDS-BV	Decorative Shroud - 26 in. x 26 in. (660 mm x 660 mm)
	Field Constructed Shrouds (See “Woodburning Termination Cap”)
CT-3A-B	Adapter - May be used with the following caps
	CT Series
	DT Series
MH841	Manufactured Housing 20 in. Thimble Extension
12966A	Manufactured Housing Thimble

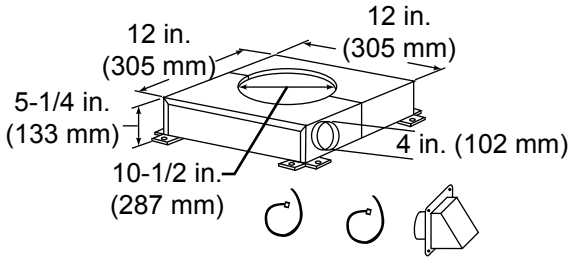

CAK4A Chimney Air Kit

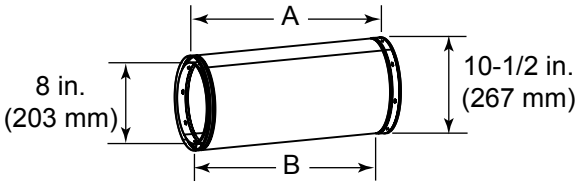

Chimney Sections

Catalog #	A		B	
	in	mm	in	mm
SL306	6	152	4-3/4	121
SL312	12	305	10-3/4	273
SL318	18	457	16-3/4	425
SL324	24	610	22-3/4	578
SL336	36	914	34-3/4	883
SL348	48	1219	46-3/4	1187

A = Actual Length
B = Effective Length (length of chimney part after it has been snapped to another)

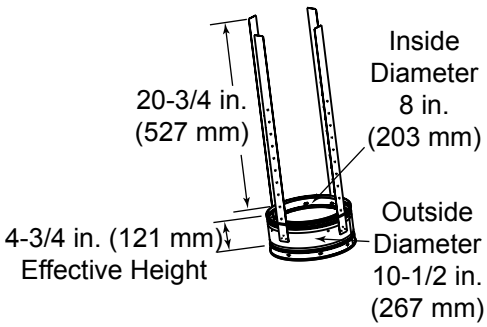

SL3 Chimney Stabilizer

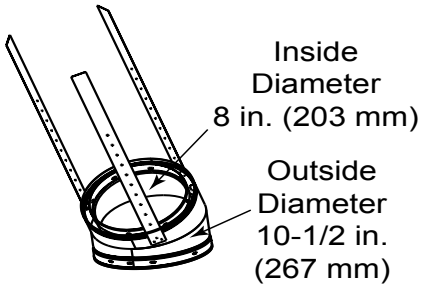

▶ **SL315 Chimney Offset/Return - Effective Height 13-3/8in. (380 mm)**
SL330 Chimney Offset/Return - Effective Height 15-1/2in. (394 mm)

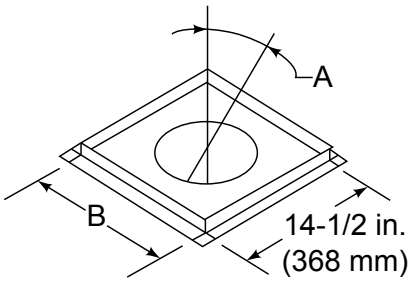

Ceiling Firestop

Catalog #	A	B	
FS338	0-deg.	14-1/2 in.	368 mm
FS339	15-deg.	18-3/8 in.	467 mm
FS340	30-deg.	23 in.	584 mm

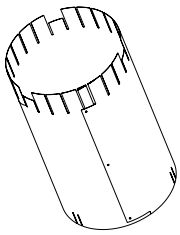

Assembled
Diameter: 14 1/2 in./368 mm
Height: 24 in./610 mm

AS8 Straight Attic Insulation Shield

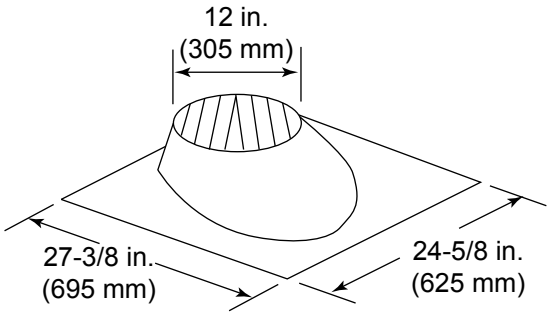

RF370 Roof Flashing

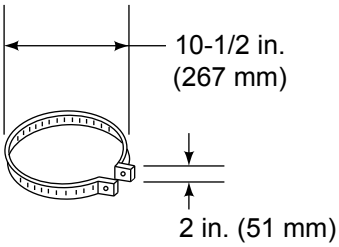

JB877 Chimney Joint Band

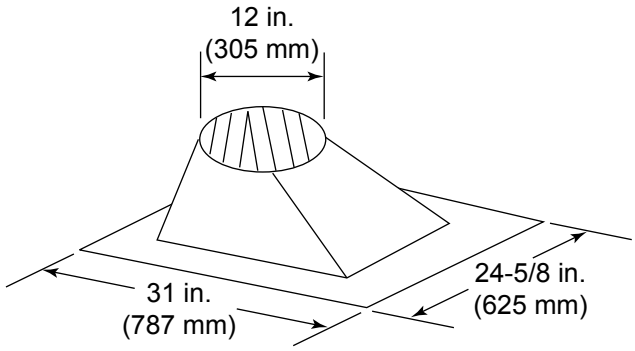

RF371 Roof Flashing

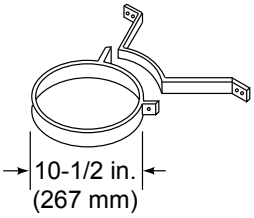

CB876 Chimney Bracket

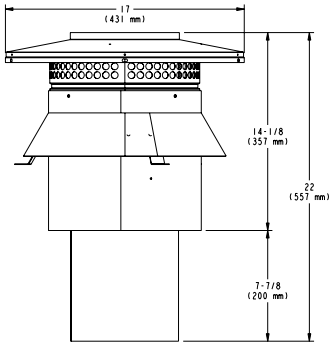

CT-3A-B

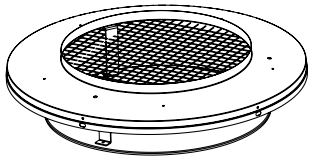

TR-TVK TR Top Vent Kit

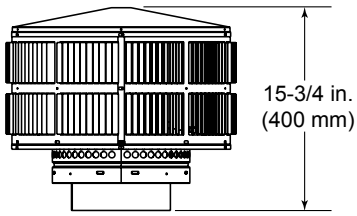

TR344 Round Termination Cap

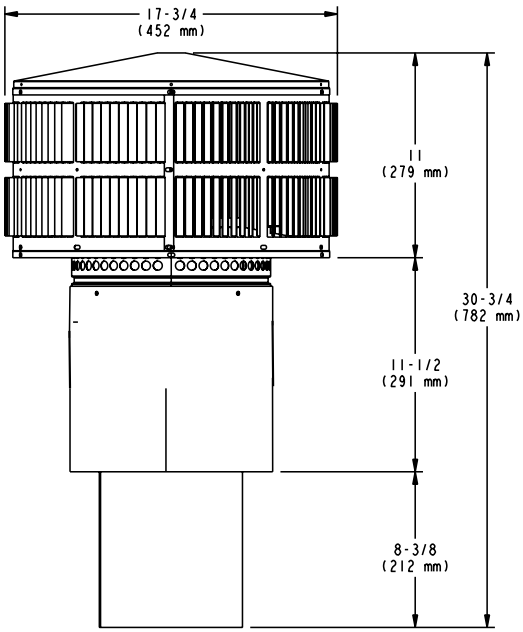

TR342-B Round Telescoping Termination Cap

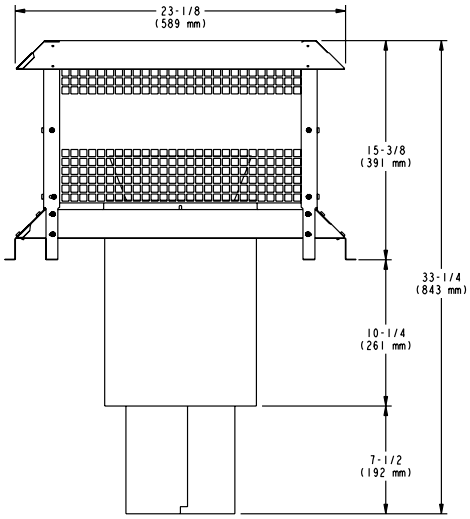

ST375 Square Termination Cap

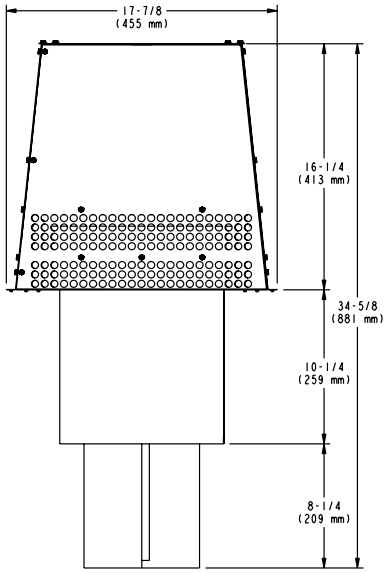

TS345/TS345P Square Termination Cap

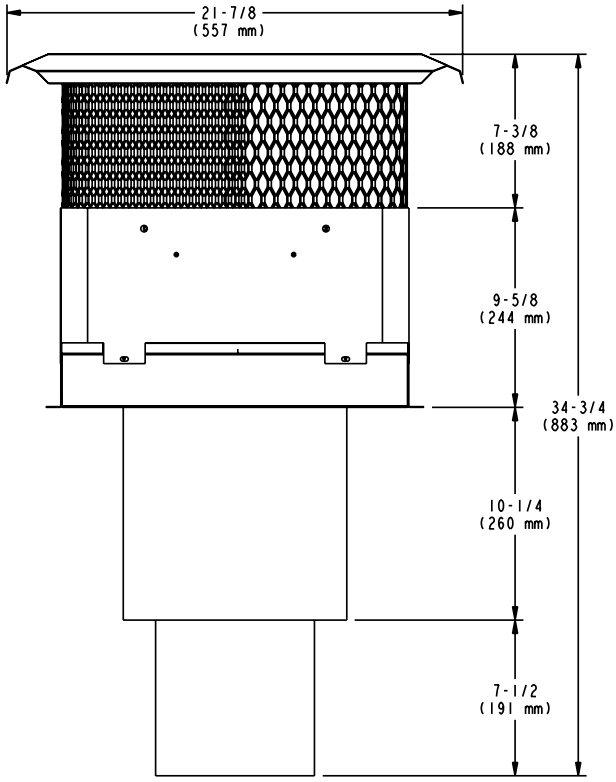

TCT375 Terra Cotta Cap

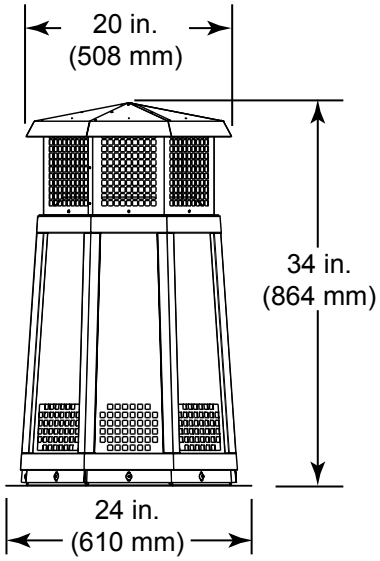

DTO134

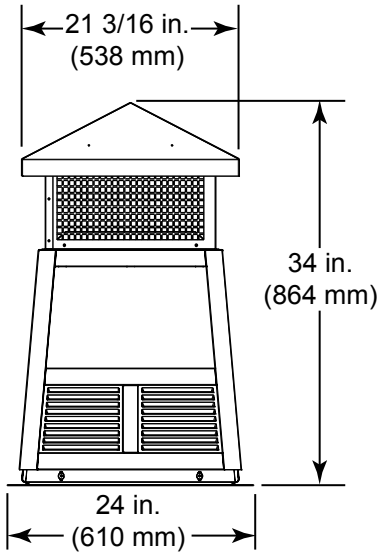

DTS134

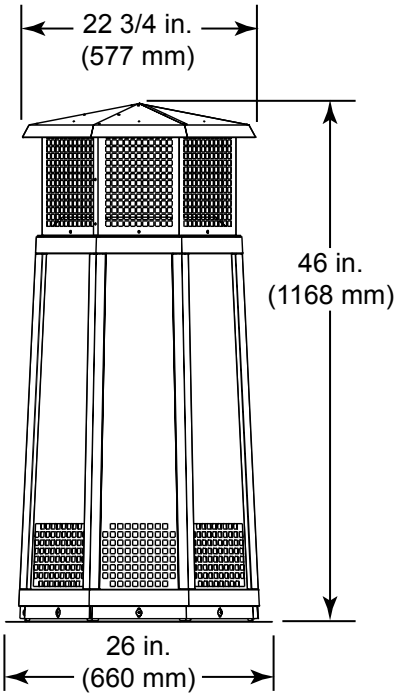

DTO146

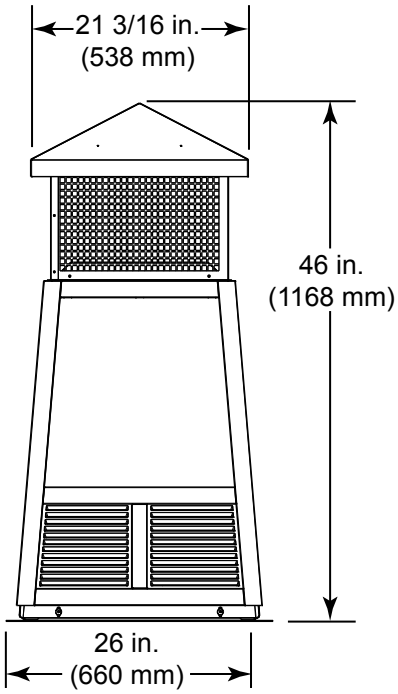

DTS146

B. Optional Components

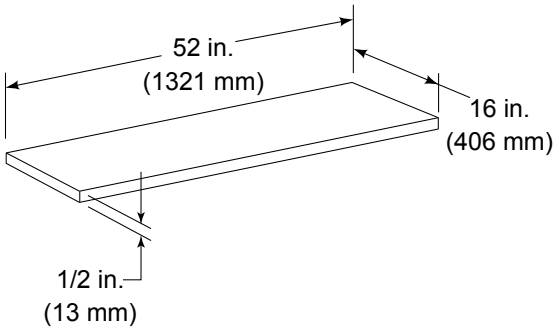

HX3 Hearth Extension

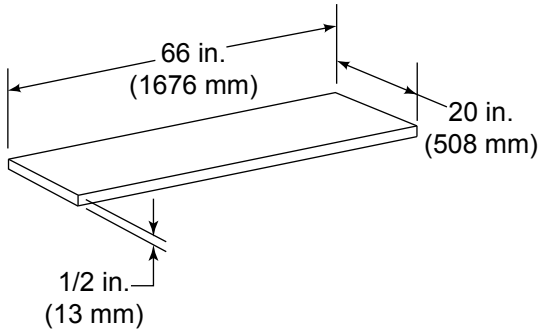

HX4 Hearth Extension

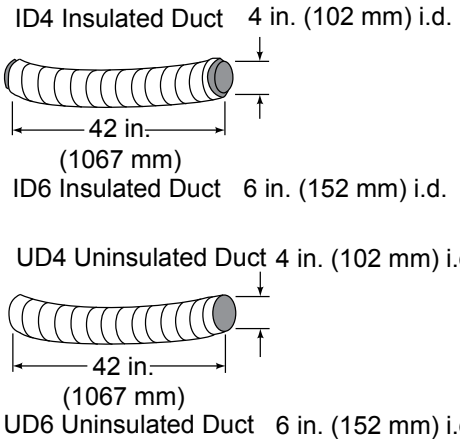

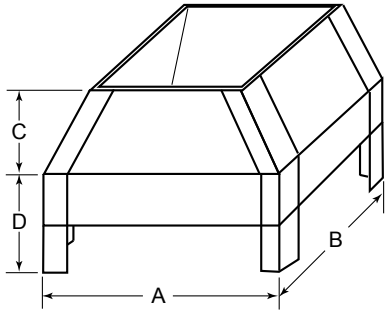

LDS33/LDS46 Decorative Shroud

Catalog #	A		B		C		D	
	in.	*mm*	*in.*	*mm*	*in.*	*mm*	*in.*	*mm*
LDS33	36	914	36	914	8.5	216	11	279
LDS46	48	1219	72	1829	8.5	216	11	279

LDSCPM - Corner Post Kit (for custom sizes)

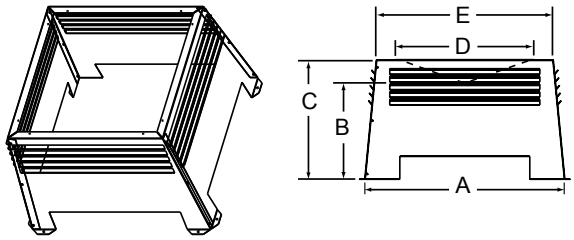

LDS-BV Decorative Shroud

Catalog #		A	B	C	E	E
LDS-BV	*in.*	26	12.5	15.5	22	23
	mm	660	318	394	533	584

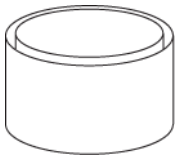

MH841

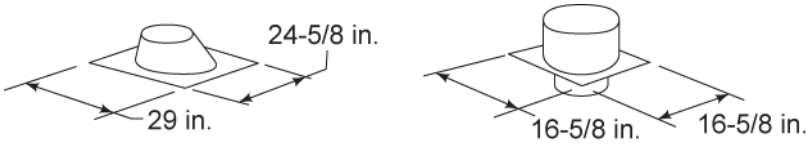

MH842 Roof Flashing & Thimble

See your Heatilator dealer for a complete list of optional components.

Heatilator, a brand of Hearth & Home Technologies
7571 215th Street West, Lakeville, MN 55044
www.heatilator.com

Please contact your Heatilator dealer with any questions or concerns.
For the location of your nearest Heatilator dealer, please visit www.heatilator.com.